ATOMIK

QUASAR POINT SOURCE SERIES

User Manual

Rev. 1.0.1

Publication Date: 5th November 2026

CONTENTS

Warnings and Important Safety Instructions 5

Quasar Point Source Series Overview 10

CHAPTER 1
Components
Q212P & Q21S 11
Q212P & Q21S Roadcase 12
XN 5.6K & XN 8K 13
XN D26 & Patch Box 14
Q212P Stacking Frame & Q21S Wheelboard. 15

Q212P Cutsheet 18
Q212P Visual Identification. 20
Q212P Internal Wiring & Schematic Wiring 22

Q21S Cutsheet 24
Q21S Visual Identification 26
Q21S Internal Wiring & Schematic Wiring 28

Q212P Roadcase cutsheet 30

Q21S Roadcase cutsheet 32

XN 5.6K cutsheet 33

XN 8K cutsheet 34

XN D26 cutsheet 35

XN Patch Box 2 Cutsheet 37
XN Patch Box 2 Visual Identification 38

Q212P Stacking Frame 42
Q212P Stacking Frame Visual Identification 43
Q212P Stacking Frame Stress Simulation 44

Q21S Wheelboard 46
Q21S Wheelboard Visual Identification 47

CHAPTER 2
Accessories
Base Top, Adaptor Board, Q212P Stacking Frame 50
Boomerang Plate, Bumper Link Bar, Plank Link Bar 51
Left & Right Connecting Plate, Ball Lock Pin 52
Q21S Roadcase, Q212P Roadcase, Q21S Wheelboard 53

CONTENTS

CHAPTER 3
Sub-Array Prediction
Q212P & Q21S - Stacked Configuration 1 55
Sub Arrays Prediction 56

Q212P & Q21S - Stacked Configuration 2 57
Sub Arrays Prediction 58

Q212P & Q21S - Stacked Configuration 3 59
Sub Arrays Prediction 60

Q212P & Q21S - Stacked Configuration 4 61
Sub Arrays Prediction 62

Q212P & Q21S - Stacked Configuration 5 63
Sub Arrays Prediction 64

CHAPTER 4
Assembly
Assembly 1 - 1xQ212P & 2xQ21S 66
Assembly 2 - 1xQ212P & 3xQ21S 71

Warranty
Warranty 77
Contact us 79

WARNINGS! IMPORTANT SAFETY INSTRUCTIONS

Thank you for purchasing the Atomik Quasar Series Loudspeakers. Please read this section carefully to ensure safe operation, optimal performance, and longevity of your product.
Failure to adhere to these instructions may result in personal injury, equipment damage, or voiding of the warranty.

1. General Safety Precautions

Read and Retain Instructions – Carefully read this manual and keep it for future reference. This document must accompany the product if ownership changes.

Intended Use – Use the Quasar Series loudspeakers exclusively with their dedicated DSP presets to ensure peak performance and protection.

No Unauthorized Modifications – Do not modify or tamper with this product, as doing so may lead to malfunction, safety hazards, or voiding of the warranty.

Qualified Personnel Only – Installation, rigging, and servicing should only be carried out by trained professionals following industry best practices.

Refer Servicing to Qualified Technicians – No user-serviceable parts inside. If the product is damaged or requires servicing, contact Atomik Support or an authorized service technician.

2. Electrical Safety

Power Handling – Ensure the power voltage matches the product specifications before use.

Grounding – This equipment must be properly grounded. Do not remove or disable the grounding pin. If unsure, consult a licensed electrician.

Power Cable Protection – Prevent damage to power cables by keeping them away from foot traffic, sharp edges, and heavy objects.

Avoid Overloading Circuits – Plugging this product into an overloaded circuit may lead to fire or electric shock.

Disconnect During Storms – Unplug the system during lightning storms or extended periods of disuse.

3. Environmental & Handling Precautions

Keep Dry – Do not expose this product to rain, moisture, or water sources. If the unit becomes wet, disconnect power immediately and seek professional servicing.

Avoid Direct Sunlight – Prolonged exposure to direct sunlight may cause overheating and material degradation.

Heat & Ventilation – Do not install near radiators, heat registers, stoves, amplifiers, or other heat-producing devices. Ensure proper airflow and ventilation to prevent overheating.

Magnetic Interference – Keep the loudspeaker away from hard drives, external storage

devices, and other magnetic-sensitive equipment to avoid data corruption.

Wind & Outdoor Use – If deployed in an outdoor environment, secure the system properly. If wind speeds exceed 6 Beaufort (Bft), lower or secure the speaker array.

4. Rigging & Suspension Safety (For Flown & Mounted Installations)

Use Certified Rigging Hardware – Only use load-rated and certified rigging accessories. Do not attempt to suspend the product using handles, non-rated eye bolts, or inappropriate hardware.

Inspection Before Suspension – Before mounting or suspending the loudspeaker, inspect all components (brackets, eyebolts, pins, rigging frames) for cracks, corrosion, deformation, or missing parts.

Professional Installation – A licensed structural or mechanical engineer must approve the placement and attachment method of the rigging system. Improper installation may lead to equipment failure, injury, or death.

Respect Working Load Limits (WLL) – Ensure all suspension hardware adheres to Working Load Limit (WLL) standards. Overloading can cause mechanical failure.

Secure Installations – When flying or stacking the loudspeaker, verify that no one is standing beneath the system during installation or lifting. Use safety cables and secondary securing methods.

5. Ground Stacking & Stand Mounting (For Pole-Mounted or Stacked Systems)

Use Sturdy Mounts – Only use manufacturer-approved poles, stands, and brackets that support the loudspeaker's weight.

Level & Stable Surface – Ensure the stand or platform is on a stable, level surface. Avoid uneven terrain that may cause tipping.

Secure Stacking – If stacking loudspeakers, do not exceed recommended stack heights. Use friction material or securing straps to prevent movement.

Cable Management – Arrange cables properly to avoid trip hazards that could cause accidental speaker falls.

6. Acoustic Safety & Hearing Protection

High Sound Levels Can Cause Hearing Damage – The Quasar Series loudspeakers can produce extreme sound pressure levels (SPL). Prolonged exposure to SPL above 90 dB can cause permanent hearing damage.

Limit Exposure – Performers, sound engineers, and audience members should avoid prolonged exposure to high SPL.

Hearing Protection Recommended – Use earplugs or noise-canceling headphones when operating at high volume levels for extended periods.

7. Maintenance & Inspections

Annual Inspection Required – A qualified technician should inspect the entire loudspeaker system at least once per year.

Check for Damage – Look for cracks, corrosion, loose fasteners, or damaged rigging components before each use.

Clean Properly – Use only a dry, lint-free cloth for cleaning. Do not use liquid cleaners or solvents.

Replace Worn Components – Any component exhibiting deformation, corrosion, or wear must be replaced immediately.

8. Disposal & Environmental Considerations

Follow Local E-Waste Regulations – This product should not be disposed of with regular household waste. Follow electronic waste recycling programs for proper disposal.

Avoid Landfill Disposal – Recycling electronic components helps reduce environmental impact. Contact local authorities for disposal guidelines.

9. Warranty & Liability Disclaimer

Atomik is **not responsible for damages resulting from improper use, installation, or unauthorized modifications.**

This product should only be used for **professional applications by trained personnel.**

Any servicing or modifications performed **by unauthorized personnel** will **void the warranty.**

For further assistance, please contact **Atomik Support (support@atomikaudio.com)**

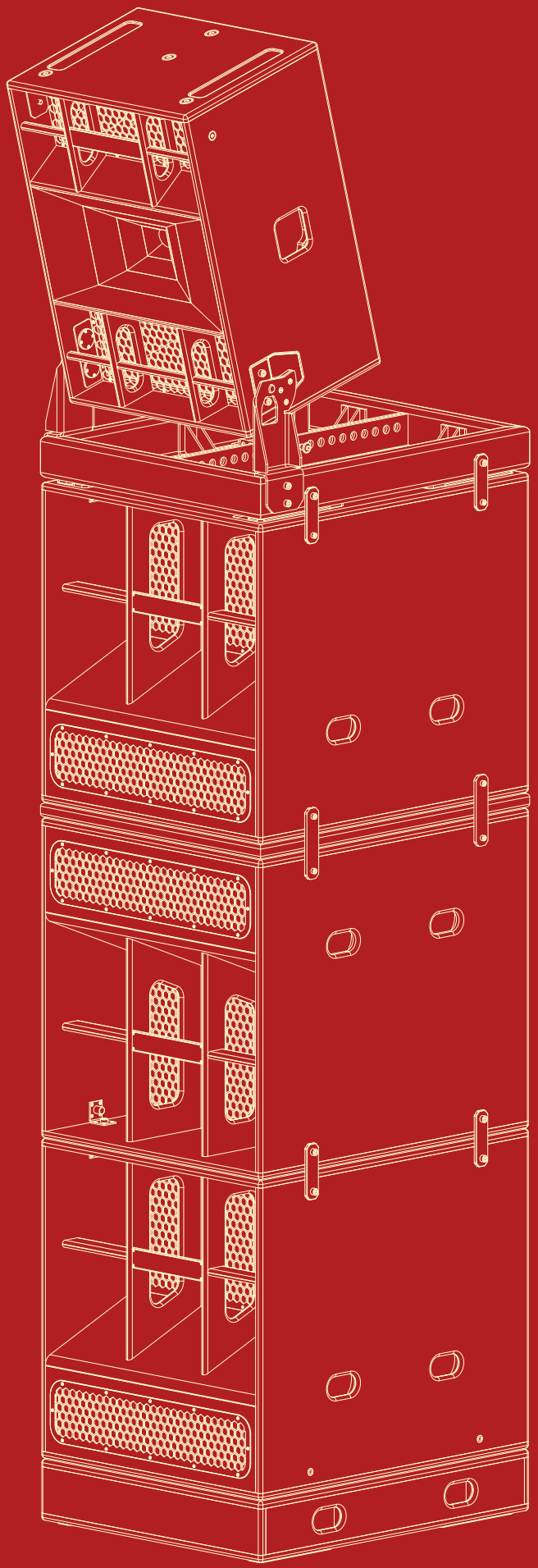

Chapter 1

Introduction

We are proud to present the Quasar Point Source Series, a breakthrough in extreme SPL loudspeakers and subwoofers engineered for uncompromising performance. At the heart of Quasar is its point source architecture, delivering coherent wavefronts with remarkable precision and control.

This design ensures pristine sonic quality—clean, musical, and highly accurate - while unleashing immense sound pressure levels that rival or surpass traditional line arrays. With Quasar, audiences are immersed in a sonic experience that is both powerful and refined, setting a new benchmark in professional sound reinforcement.

Beyond sheer output, Quasar is built for ease of use, combining cutting-edge acoustic engineering with practical deployment features. Its intuitive design makes setup and integration seamless, whether for touring, rental, or fixed installations. From breathtaking clarity to chest-thumping low-frequency impact, Quasar balances power, precision, and usability in one cohesive system.

Elevate your sound with Quasar—where precision meets power.

Q212P

Description

The Q212P is an ultra-powerful 3-way point source loudspeaker that combines compact dimensions with remarkable output capability. Designed for small to medium-sized venues, it delivers consistently high SPL performance while maintaining clarity and precision across the frequency spectrum.

Its fully horn-loaded architecture ensures exceptional sensitivity and efficiency, projecting sound with authority and control. The system employs a 1" HF compression driver for crisp, detailed highs, a 2" MF driver for articulate midrange reproduction, and dual 12" neodymium LF drivers equipped with massive 4" voice coils to handle low-end duties with depth and impact.

Together, these elements create a full-range solution that balances power, accuracy, and efficiency, making the Q212P an ideal choice for demanding live sound applications.

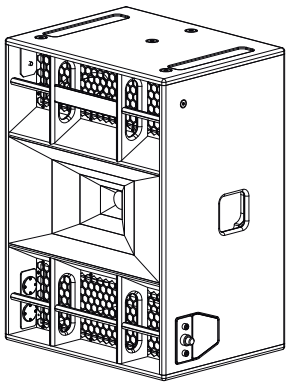

Q21S

Description

The Q21S high-power horn-loaded sub bass loudspeaker is designed for extreme low-frequency performance in large-scale professional audio applications. It features a massive 21" neodymium driver with a 5.3" voice coil and a demodulating ring to reduce distortion, while its horn-loaded architecture ensures exceptional sensitivity and efficiency.

Compared to conventional dual-18" subwoofers, the Q21S delivers superior SPL output and deeper low-end extension, making it ideal for arenas, festivals, and other demanding environments.

Its advanced low-noise forced-air cooling system enhances thermal management, ensuring reliable high-performance operation even under the most challenging conditions.

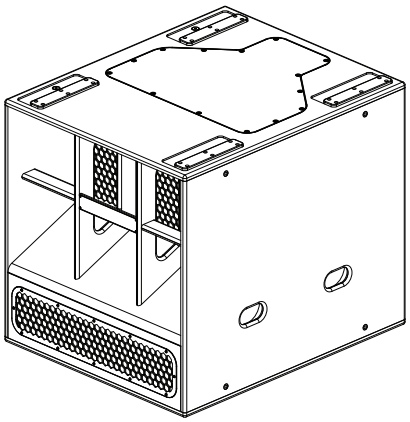

Q212P Road Case

Description

Purpose-built for the demands of touring professionals, rental houses, and high-output DJs, the Atomik RC Series ensures that your gear arrives safe, sound, and performance-ready. Each case is engineered to withstand the rigors of transit, combining a reinforced outer shell with a shock-absorbing, custom-molded rubber interior.

The RC Q212P Road Case is specifically designed to house the Q212P loudspeaker, offering precision fit and uncompromised protection during transport.

Beyond protection, the RC Series is designed for ease of use and efficiency.

With top-panel castor dishes for secure truck-ready stacking, streamlined handling, and rugged reliability, these cases simplify logistics while safeguarding valuable equipment.

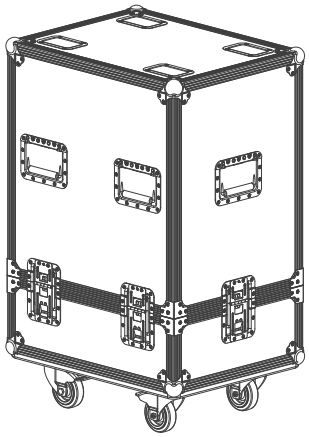

Q21S Road Case

Description

Purpose-built for the demands of touring professionals, rental houses, and high-output DJs, the Atomik RC Series ensures that your gear arrives safe, sound, and performance-ready.

The RCQ21S Road Case is custom-engineered to house the powerful Q21S Sub, combining a reinforced outer shell with a shock-absorbing, custom-molded rubber interior.

This precision cradle protects your line arrays against the rigors of transit, offering uncompromised reliability for productions that demand consistency night after night.

Beyond protection, the RCQ21S is designed for workflow efficiency and logistics ease. With top-panel castor dishes for secure truck-ready stacking, streamlined handling, and rugged durability, this case simplifies transport while safeguarding valuable equipment.

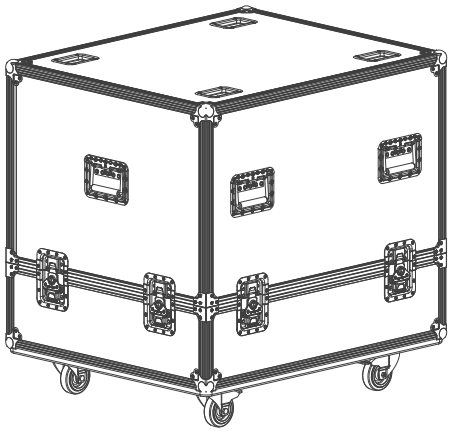

XN 5.6K

Description

The Atomik XN 5.6K is a high-output, four-channel amplifier built for professionals who demand consistent performance in permanent installations or for mobile solutions.

With advanced Class-H topology, the XN 5.6K delivers clean, efficient power with reduced thermal load, ensuring long-term stability even in the most demanding environments. Its conventional power supply reinforces reliability and serviceability, providing the operational confidence needed for pro-audio systems.

Housed in a compact 2U chassis, the XN 5.6K delivers precise, high-fidelity audio across all four channels. From stage to install, it's engineered to power your system with clarity, headroom, and control, every time.

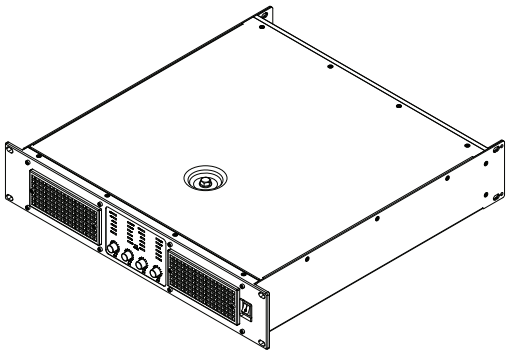

XN 8K

Description

The Atomik XN 8K is a high-quality quad channel professional amplifier. Suited for installations and pro audio rental companies. Very stable,high-fidelity four channels in a compact 2U enclosure. Employing Class TD topologies for enhanced efficiency and lower heat dissipation. Designed with a conventional power supply for high reliability and value.

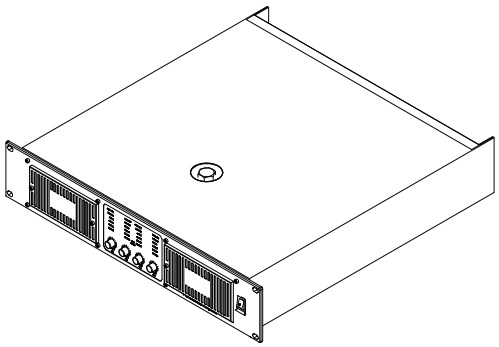

XN D26

Description

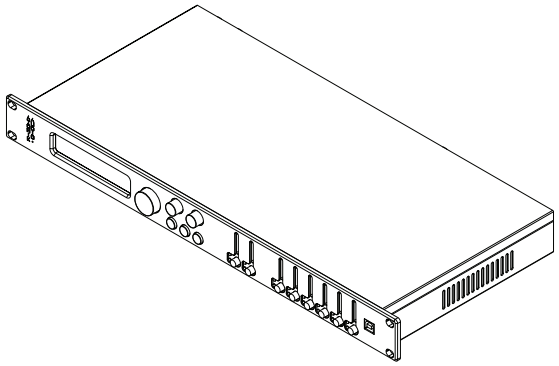

The XN D26 is a 2-IN/6-OUT digital speaker management system for fitting any crossover configuration, with suitable processing and control for live application use.

2 analog inputs and 6 analog outputs are managed by a powerful DSP Engine, in addition to 24 Bit AD/DA Converters. Each input channel provides PEQ, Gain Control, Dynamic Low Boost, Noise Gate Function, RMS Compressor, Internal White/Pink Noise Generator and a Configurable Delay.

Each output offers up to 7 PEQ with crossover filters which slopes from 6 up to 48dB/Octave. Each output path also features peak limiter or RMS Compressor selectable, Dynamic Loudness filter (only Output 1,3,5) and driver alignment delay.

The XN D26 supports a full matrix mixing mode where inputs may be routed/ mixed in any ratio to any output. For remote configuration and control the XN D26 can be connected via USB or RS485 connections to the dedicated PC control Software.

Patch Box

Description

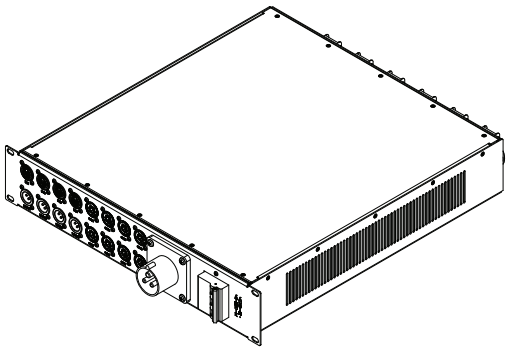

The Atomik Patch Box 2.0 is an all in one unit that distributes power, line level audio signals and speaker level signals. It acts as a hub for all input, output and power supply cabling in the equipment rack or flight case. Its heavy duty construction makes it rugged, roadworthy and completely at home on the road or in an install project. Extremely secure connections in all input, output and power domains.

Great unit for perfect cabling practices in equipment racks and flight cases.

Q212P Stacking Frame

Description

The Quasar Point Source Stacking Frame is a purpose-built rigging accessory engineered to support both Q212P modules and Q21S subwoofers.

Designed for touring and installation scenarios, it offers maximum flexibility across venue types while maintaining uncompromising stability.

Critically, this frame is configured for single Q212P stacking only. By restricting deployment to one Q212P per frame, Atomik ensures optimal safety, balance, and acoustic precision in compact point-source setups.

This deliberate design choice simplifies logistics, reduces rigging complexity, and guarantees consistent performance across diverse environments.

Whether used in small venues or larger productions, the Quasar stacking frame delivers adaptability with the assurance of safe, single-module operation.

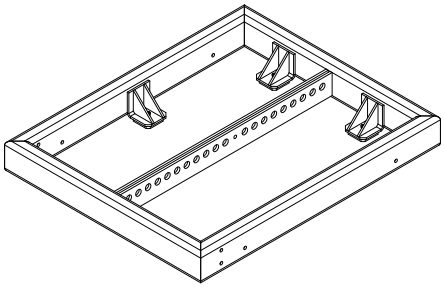

Q21S Wheelboard

Description

The Atomik Quasar Point Source Series Wheel Board is engineered for effortless mobility and maximum durability, serving as the perfect transport solution for Q212P and Q21S enclosures during setup and teardown.

Built from heavy-duty 18 mm plywood and finished with industrial-grade paint, it withstands the rigors of touring while oversized rugged wheels glide smoothly across uneven terrain.

Ergonomic handles and lockable wheels ensure safe maneuvering, even on inclined surfaces, while its stackable design accommodates multiple subwoofers for efficient transport and storage.

By streamlining workflow with rapid setup and teardown and reducing strain through thoughtful ergonomic handling, the Wheel Board delivers reliability and convenience for both live events and fixed installations - combining durability, safety, and efficiency in one essential accessory.

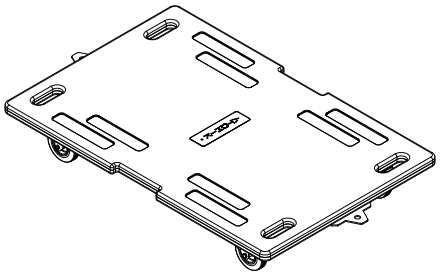

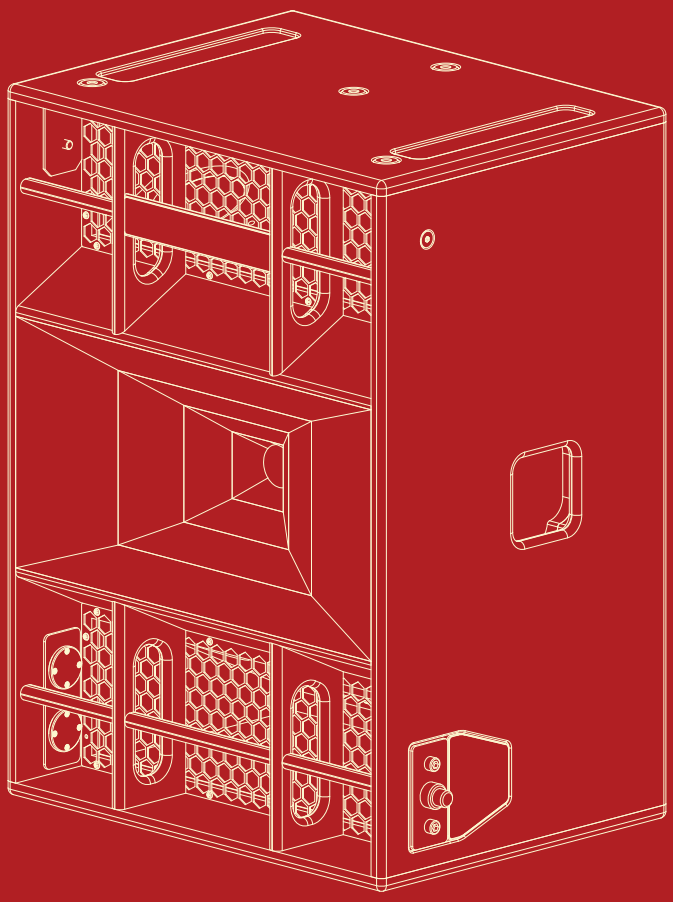

Quasar Q212P

SKU Number: Q212P - SPKR - 0000 - 9158

Description

The Q212P is an ultra-powerful 3-way point source loudspeaker that combines compact dimensions with remarkable output capability. Designed for small to medium-sized venues, it delivers consistently high SPL performance while maintaining clarity and precision across the frequency spectrum.

Its fully horn-loaded architecture ensures exceptional sensitivity and efficiency, projecting sound with authority and control. The system employs a 1" HF compression driver for crisp, detailed highs, a 2" MF driver for articulate midrange reproduction, and dual 12" neodymium LF drivers equipped with massive 4" voice coils to handle low-end duties with depth and impact.

Together, these elements create a full-range solution that balances power, accuracy, and efficiency, making the Q212P an ideal choice for demanding live sound applications.

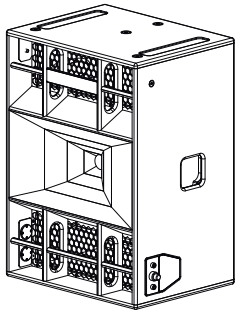

Features

- Ultra-powerful 3-way design - Compact point source loudspeaker delivering full-range performance.
- High SPL capability - Suitable for small to medium-sized venues and demanding live events.
- Fully horn-loaded architecture - Ensures exceptional sensitivity, efficiency, and projection.
- Dedicated driver configuration - 1" HF compression driver for crisp high.
  - 2" MF driver for articulate midrange.
  - Dual 12" neodymium LF drivers with massive 4" voice coils for deep, controlled bass.
- Compact footprint - Small footprint design with big output.
- Efficiency and clarity - Balanced reproduction across all frequency bands.

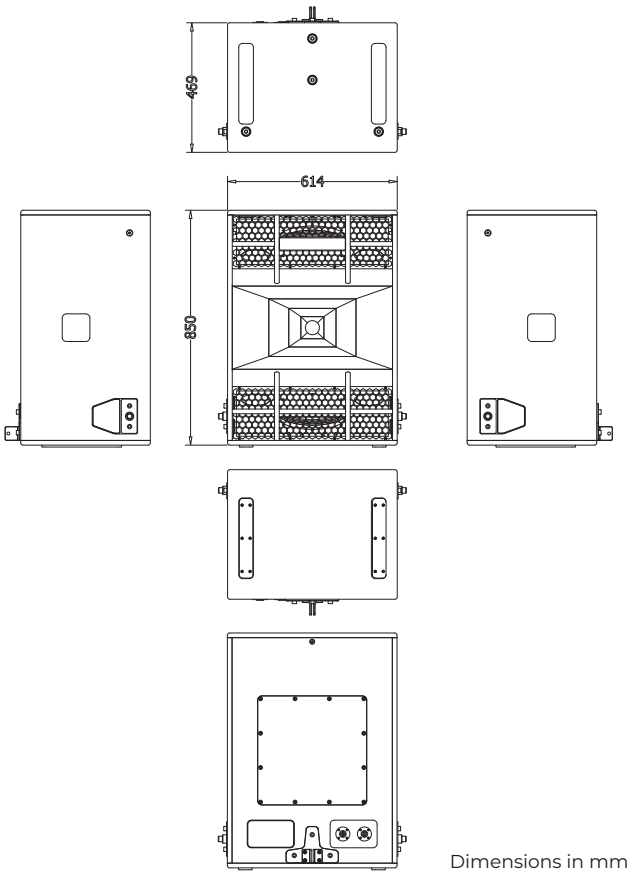

Dimensions in mm

Technical specifications

- HF Driver : 1" Compression Driver
- MF Driver : 2" Compression Driver
- HF Horn : 80 x 50 Degree nominal coverage pattern
- Enclosure : Fully Horn loaded
- Axial Sensitivity : 109dB@1w/1m
- Maximum SPL : 138dB Peak SPL
  140dB Peak SPL inf
- Power : HF Driver 80 Watts AES
  HF Driver 450 Watts Peak
  MF Driver 150 Watts AES
  MF Driver 1000 Watts Peak
  LF Driver 1400 Watts Max
  LF Driver 2800 Watts Peak
- Nominal Impedance : HF/MF - 8 ohms
  LF - 4 ohms
- Frequency response 1 : -6dB 53Hz to 18khz
- Frequency response 2 : -10dB 50Hz to 18khz
- Dimensions : WxHxD - 614mm x 850mm x 469mm
- Weight : 57 kgs

Quasar Q212P

Accessories

- Base
- Flight Case
- Bumper
- Wheel Board
- Stacking Frame

Applications

- Rental
- HOW
- Clubs
- Restaurants
- Auditoriums
- Gyms
- Festivals

VISUAL IDENTIFICATION OF PARTS & ACCESSORIES

1 - Skid Dish

2 - Flying Point

3 - Flying Point

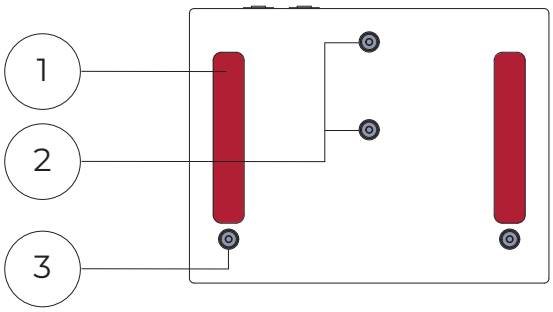

TOP VIEW

4 - HF / MF Horn

5 - LF Horn

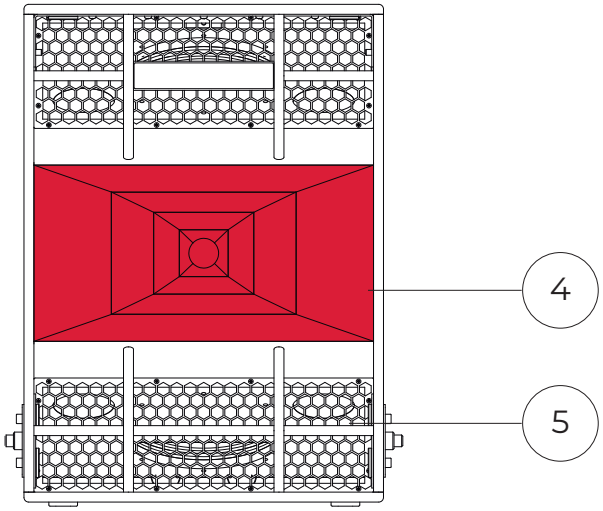

ISO VIEW

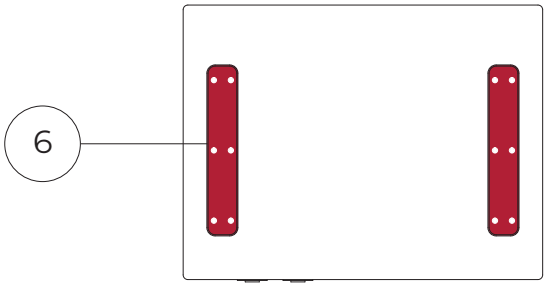

BOTTOM VIEW

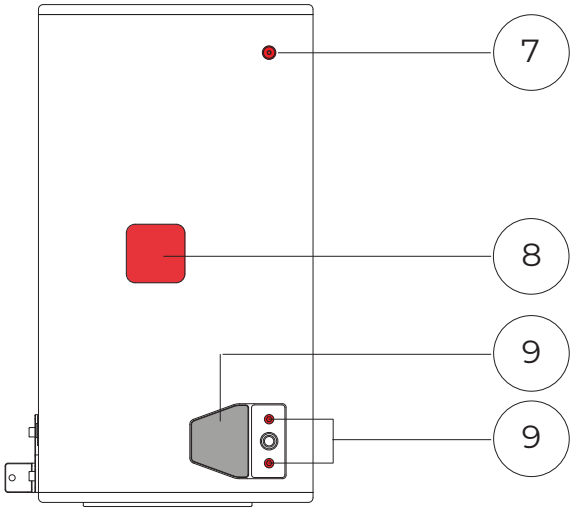

REAR VIEW

6 - Skids

7 - Internal Steel reinforcement

8 - Handle

9 - Angle Indicator

10 - Stacking / Rigging Points

11 - Protective Steel Grills

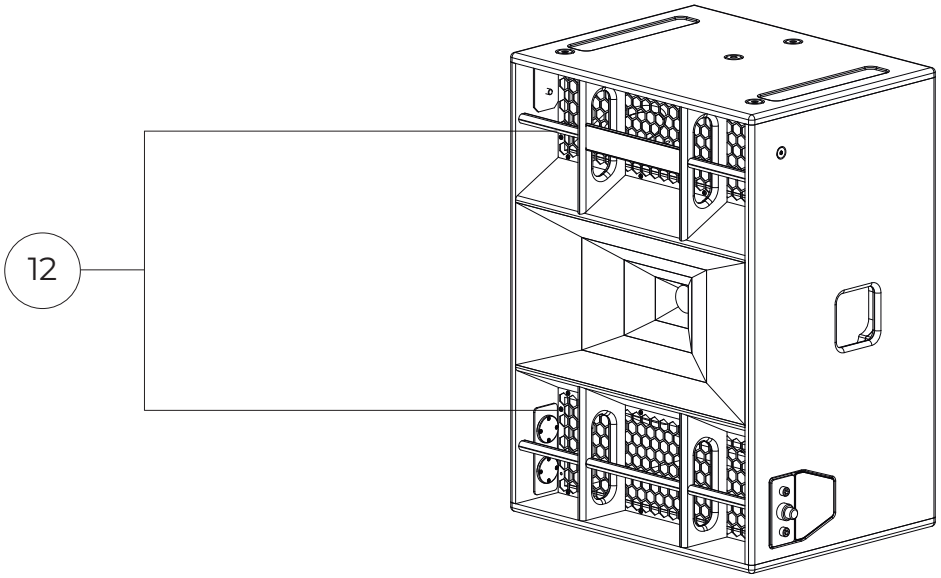

ISO VIEW

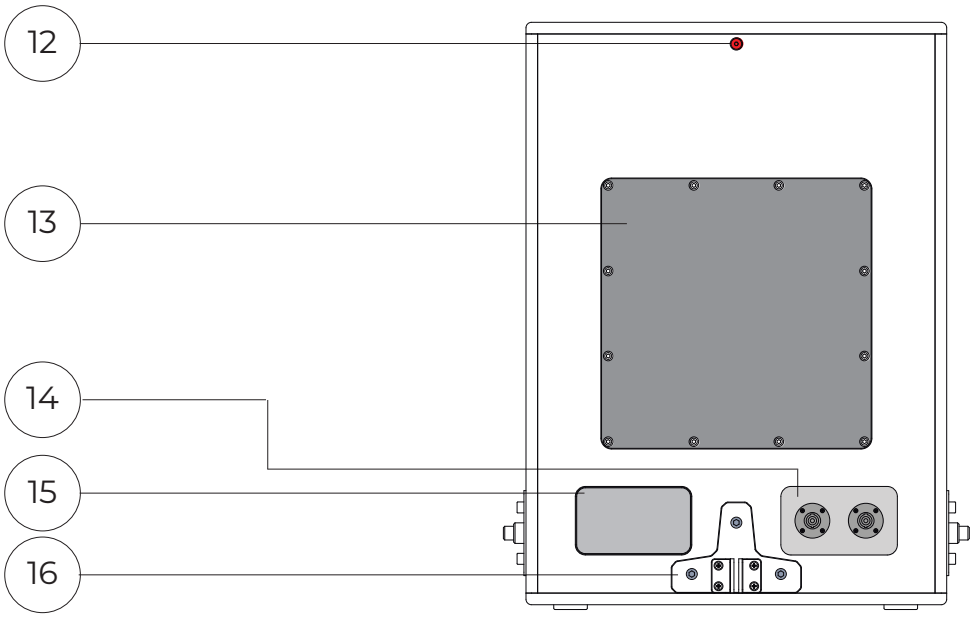

REAR VIEW

12 - Internal Steel Reinforcement

13 - Driver Access Panel

14 - Speakon Connectors

15 - Sticker Panel

16 - Rear Flying/Stacking Points

INTERNAL WIRING SCHEMATIC Q212P

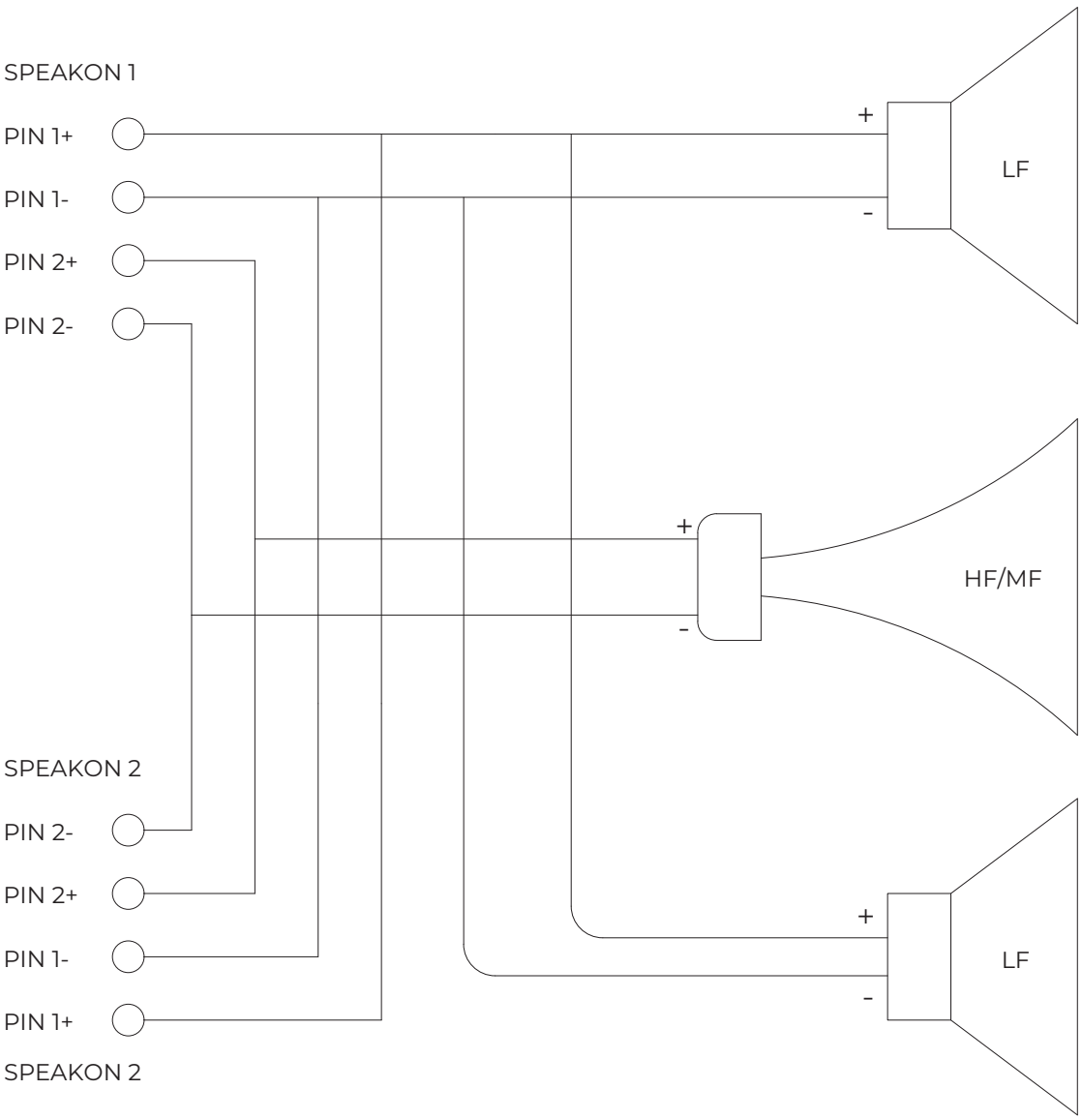

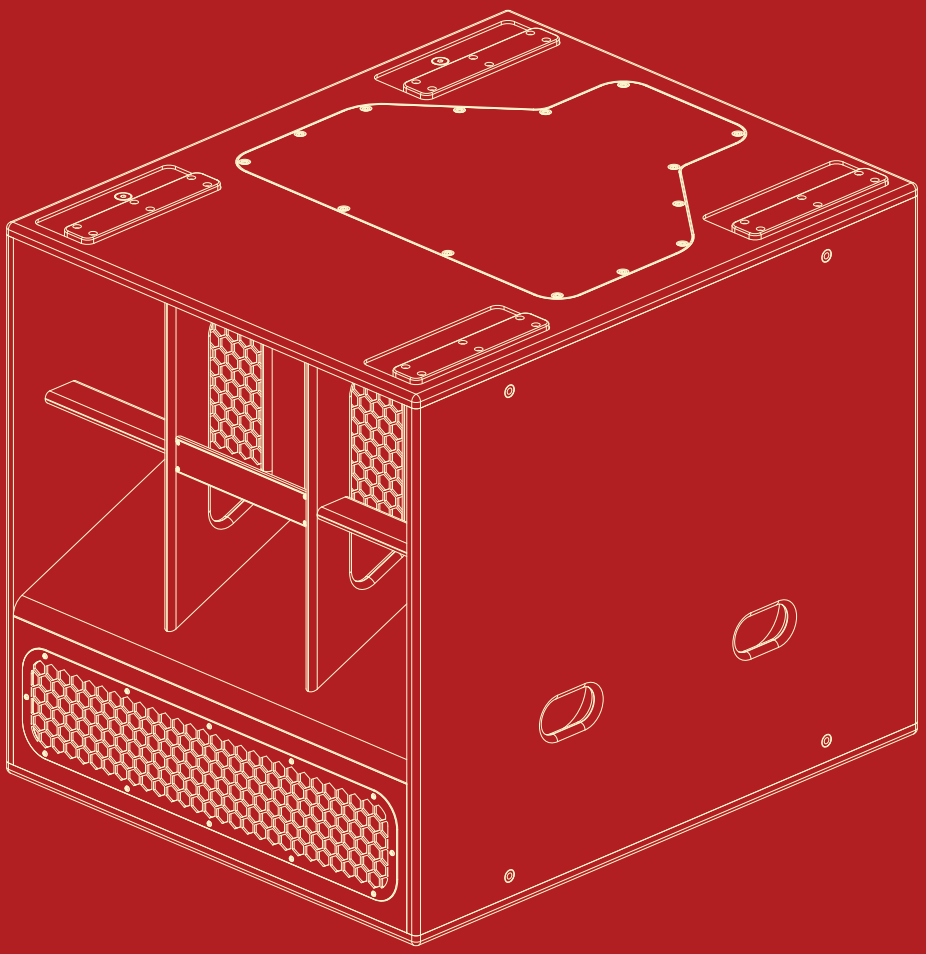

Quasar Q21S

SKU Number: Q21S - SUB - 0000 - 6827

Description

The Q21S is a high-power horn-loaded sub bass loudspeaker designed for extreme low-frequency performance.

It employs a massive 21" neodymium driver with a 5.3" voice coil and a demodulating ring to minimize distortion, while its horn architecture delivers exceptional sensitivity and efficiency.

Compared to conventional dual-18" subwoofers, the Q21S achieves superior SPL output and deeper low-end extension, making it ideal for large-scale professional audio applications.

Its advanced low-noise forced-air cooling system enhances thermal management, ensuring reliable high-performance operation even under the most demanding conditions.

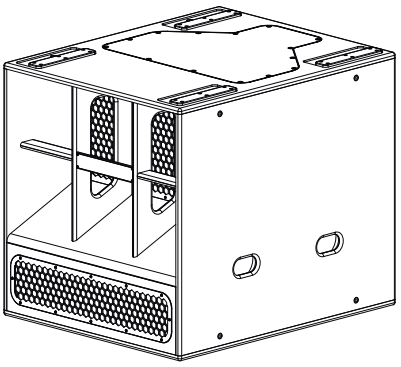

Features

- Incredible SPL levels: Engineered for maximum sound pressure output, delivering chest-thumping low frequencies.
- 21" Driver: Equipped with a massive 21-inch woofer featuring a 5.3" voice coil for extreme power handling and durability.
- Dual Neutrik NL4: Professional Speakon connectors ensure secure, reliable signal transmission.
- Marine-grade plywood: Heavy-duty 18mm enclosure construction for strength and acoustic integrity.
- Large-venue ready: Perfectly suited for discos, clubs, and live performances, where high SPL and reliability are critical.

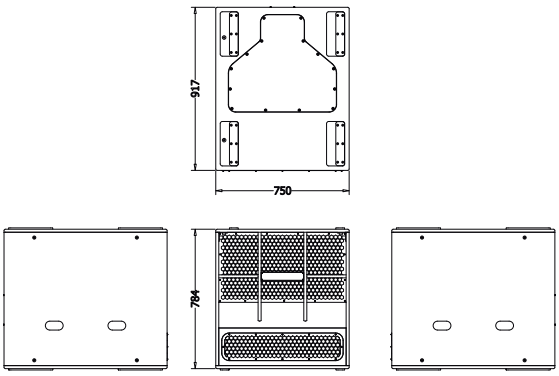

Technical specifications

- Sub Driver - 21” neodymium sub driver with a 5.3" voice coil.
- Enclosure - Horn-loaded
- Axial Sensitivity - 104 dB @ 1W/1m
- Maximum SPL - 142.2 dB Peak SPL (Measured – AES75-2022 M-Noise)
- 142.4 dB Peak SPL inf (Measured – AES75-2022 M-Noise)
- Power - Max 1800 watts long term continuous / Peak 3600 watts
- Nominal Impedance - 8 ohms passive
- Minimum Impedance - 8 ohms @ 49 Hz
- Frequency Response - -3dB 44Hz to 110Hz
- Dimensions (in mm & in WxHxD) - 750mm x 784mm x 917mm, 29.52 x 30.86 x 36.10
- Weight - 68kg / 187lbs

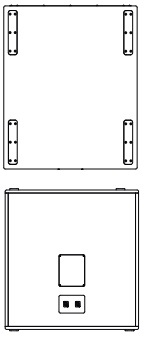

Dimensions in mm

Accessories

- Base
- Flight Case
- Bumper
- Wheel Board
- Stacking Frame

Applications

- Rental
- HOW
- Clubs
- Restaurants
- Auditoriums
- Gyms
- Festivals

VISUAL IDENTIFICATION OF PARTS & ACCESSORIES

1 - Skid Dish

2 - Internal Steel Reinforcement

3 - Driver Access Panel

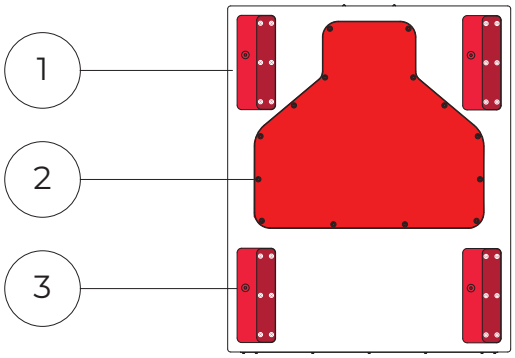

TOP VIEW

4 - Protective Steel Grill

5 - Protective Steel Grill

6 - Skid

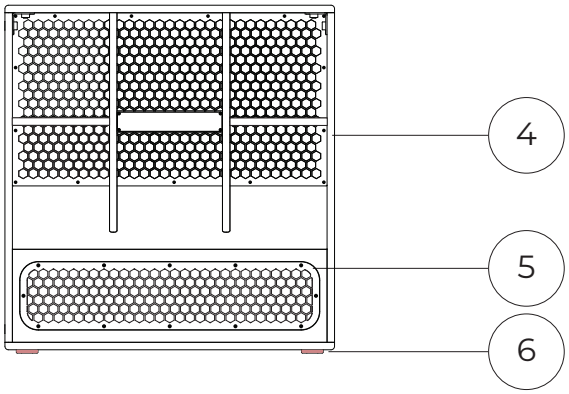

FRONT VIEW

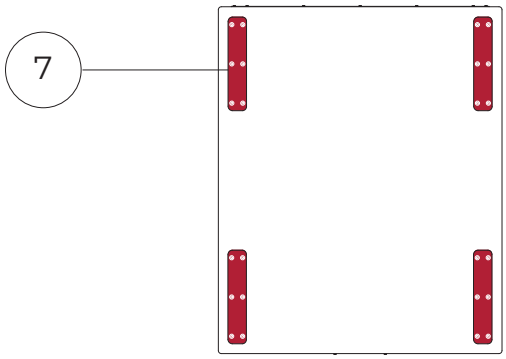

BOTTOM VIEW

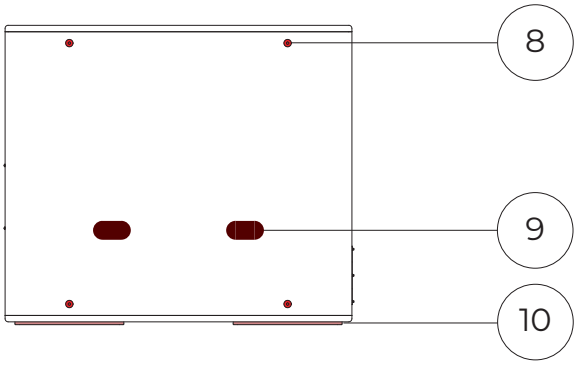

SIDE VIEW

7 - Skid

8 - Internal Steel reinforcement

9 - Handle

10 - Skid

11 - Protective Steel Grill

12 - Protective Steel Grill

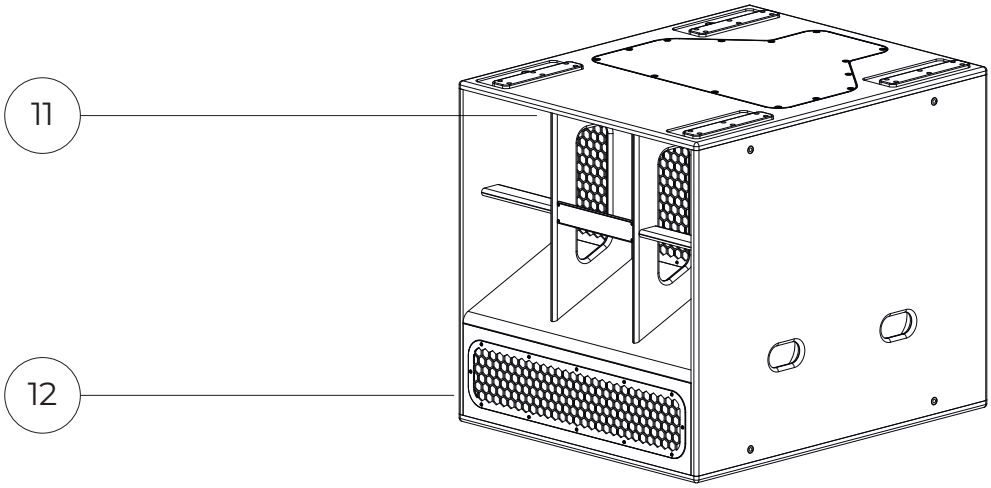

ISO VIEW

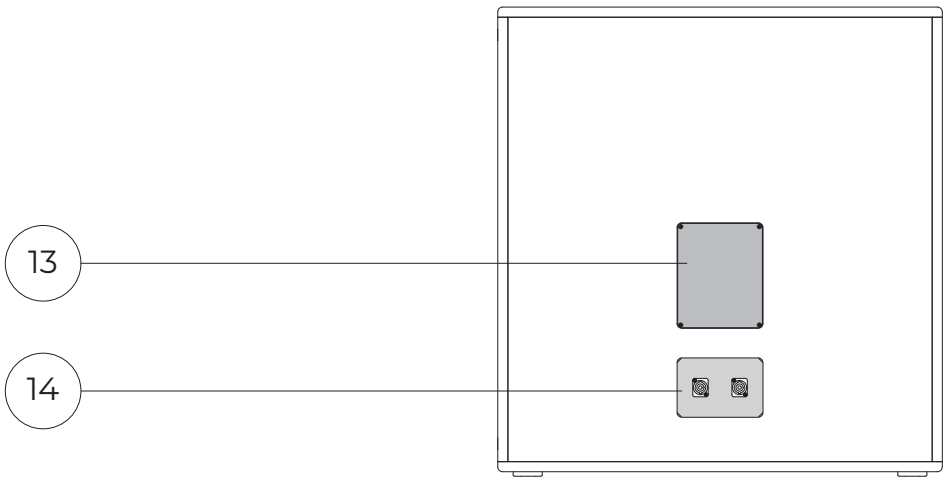

REAR VIEW

13 - Sticker Panel

14 - Speakon Panel

INTERNAL WIRING SCHEMATIC Q21S

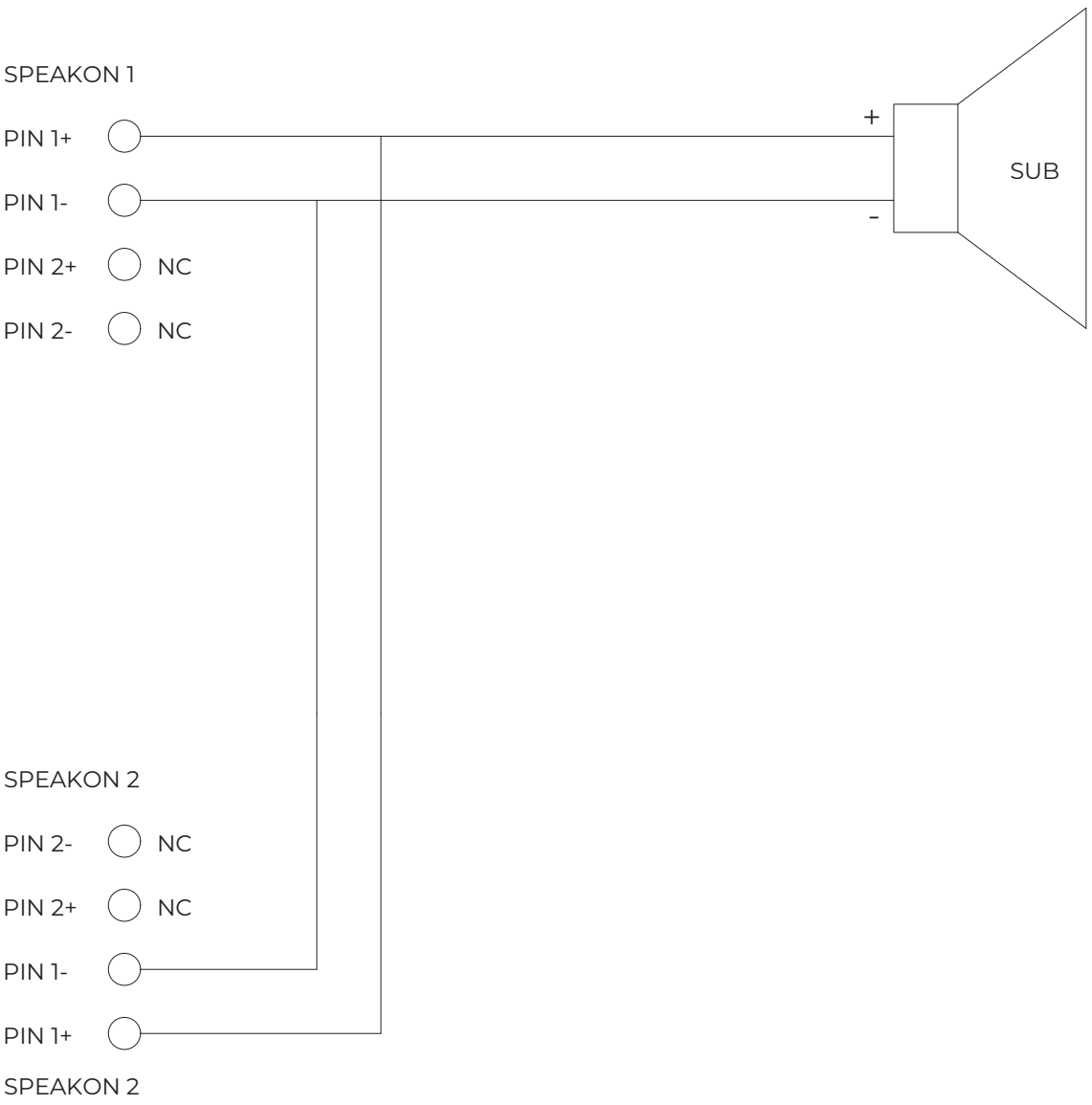

*NC - NOT CONNECTED

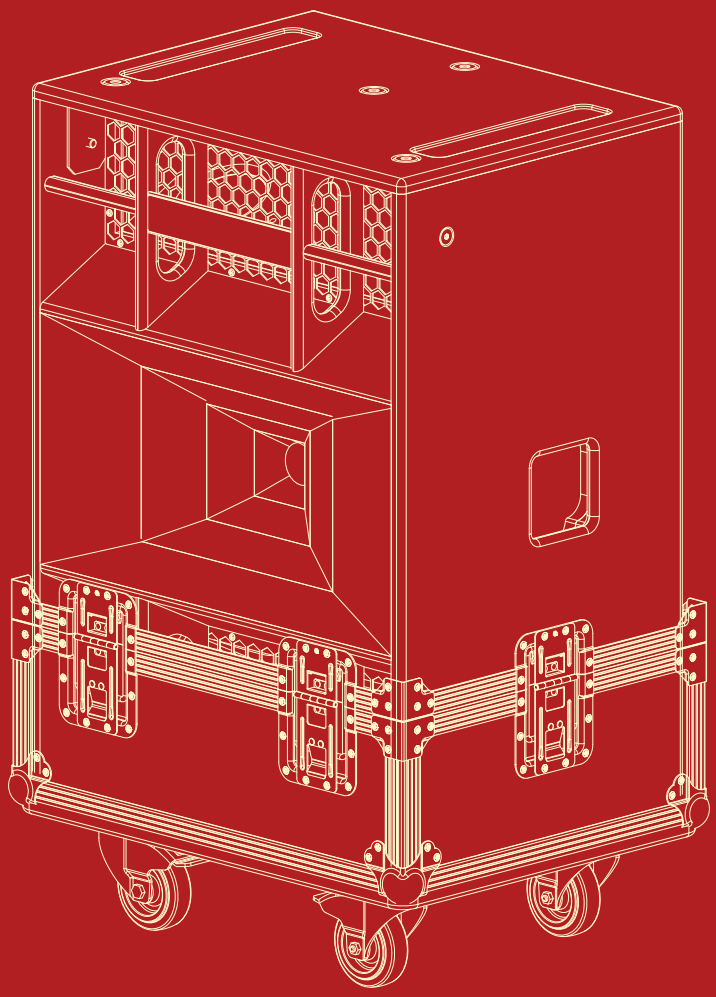

Q212P Road Case

SKU Number: Q212P - CASE - 0000 - 6348

Description

Purpose-built for the demands of touring professionals, rental houses, and high-output DJs, the Atomik RC Series ensures that your gear arrives safe, sound, and performance-ready.

Each case is engineered to withstand the rigors of transit, combining a reinforced outer shell with a shock-absorbing, custom-molded rubber interior.

The RC Q212P Road Case is specifically designed to house the Q212P loudspeaker, offering precision fit and uncompromised protection during transport.

Beyond protection, the RC Series is designed for ease of use and efficiency. With top-panel castor dishes for secure truck-ready stacking, streamlined handling, and rugged reliability, these cases simplify logistics while safeguarding valuable equipment.

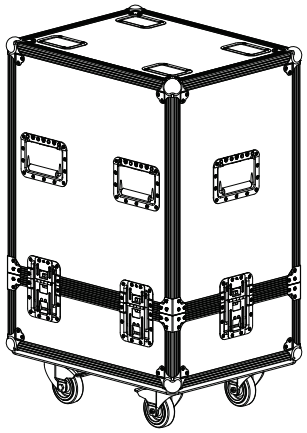

Features

- Heavy Duty Road Case.
- 6mm Marine Plywood.
- Medium Recessed Flip Handles.
- 100mm Castors (2 x Braked).
- 25mm Foam Lining.
- Heavy Duty Hardware
- Large Recessed Latches.
- Aluminium profiles 40 x 40 mm.
- Removable Top Door.
- Steel Corners & Aluminium Extrusions.
- Strong Carry Handles.

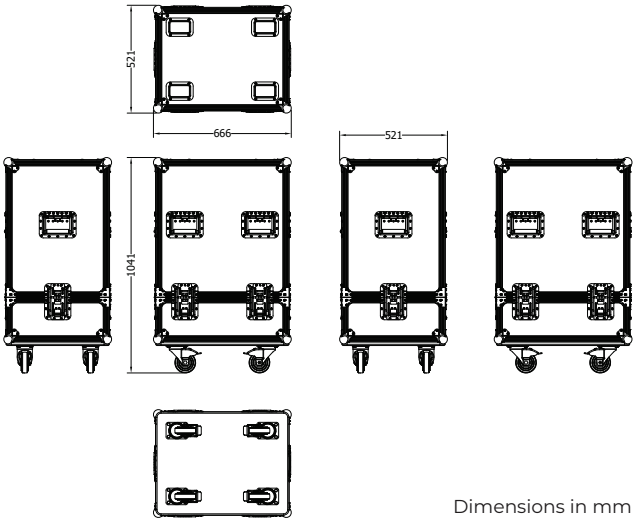

Dimensions in mm

Technical specifications

- Dimension - 846mm x 714mm x 479mm

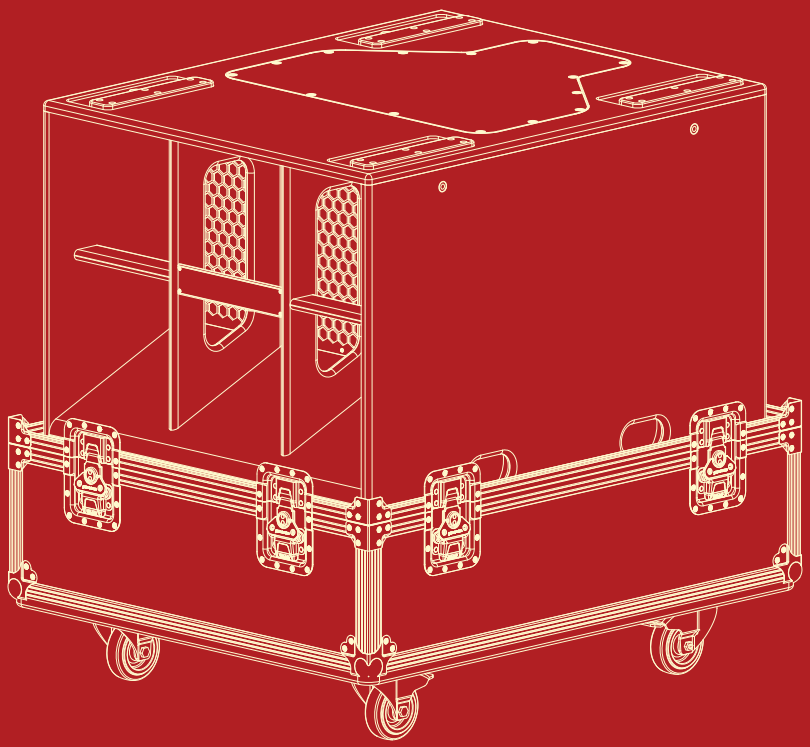

Q21S Road Case

SKU Number: Q21S - CASE - 0000 - 8517

Description

Purpose-built for the demands of touring professionals, rental houses, and high-output DJs, the Atomik RC Series ensures that your gear arrives safe, sound, and performance-ready.

The RCQ21S Road Case is custom-engineered to house the powerful Q21S Sub, combining a reinforced outer shell with a shock-absorbing, custom-molded rubber interior.

This precision cradle protects your line arrays against the rigors of transit, offering uncompromised reliability for productions that demand consistency night after night.

Beyond protection, the RCQ21S is designed for workflow efficiency and logistics ease. With top-panel castor dishes for secure truck-ready stacking, streamlined handling, and rugged durability, this case simplifies transport while safeguarding valuable equipment.

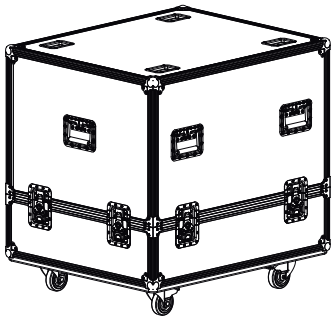

Features

- Heavy Duty Road Case.
- 6mm Marine Plywood.
- Medium Recessed Flip Handles.
- 100mm Castors (2 x Braked).
- 25mm Foam Lining.
- Heavy Duty Hardware
- Large Recessed Latches.
- Aluminium profiles 40 x 40 mm.
- Removable Top Door.
- Steel Corners & Aluminium Extrusions.
- Strong Carry Handles.

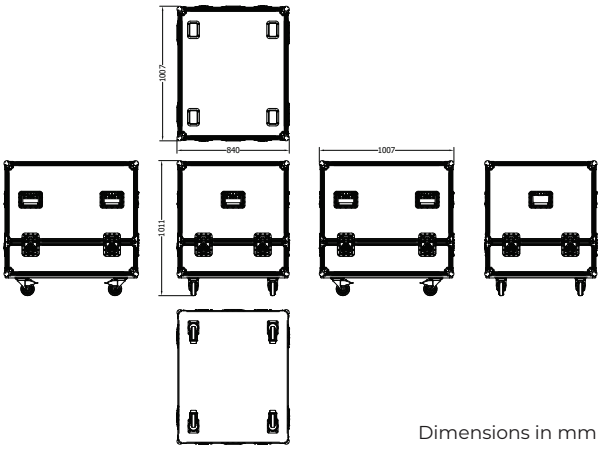

Dimensions in mm

Technical specifications

- Dimension - 846mm x 714mm x 479mm

XN 5.6K

SKU Number: XN56K-AMP-0000-5963

Description

The Atomik XN 5.6K is a high-output, four-channel amplifier built for professionals who demand consistent performance in permanent installations or for mobile solutions.

With advanced Class-H topology, the XN 5.6K delivers clean, efficient power with reduced thermal load, ensuring long-term stability even in the most demanding environments. Its conventional power supply reinforces reliability and serviceability, providing the operational confidence needed for pro-audio systems.

Housed in a compact 2U chassis, the XN 5.6K delivers precise, high-fidelity audio across all four channels. From stage to install, it's engineered to power your system with clarity, headroom, and control, every time.

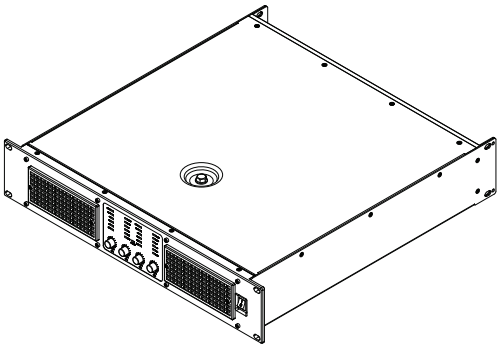

Features

- High wattage in a compact 2U rack unit.
- Quad channel.
- Class H topology.
- DC protection.
- Short circuit protection.
- High temperature protection.
- Output overloaded protection.
- Dentented gain controls.
- Ground lift switch.
- Removable dust filters on the front panel.

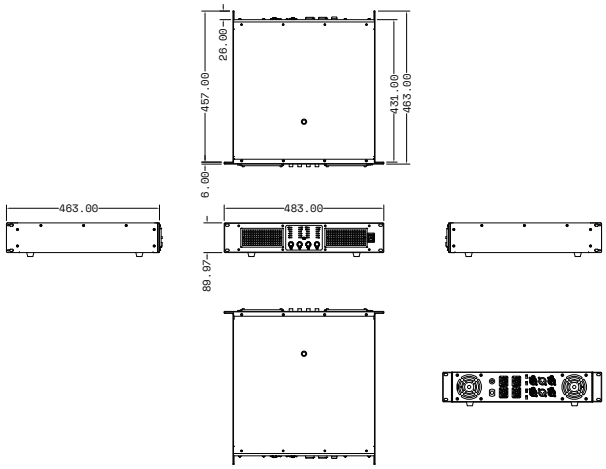

Dimensions in mm

Technical specifications

8Ω per channel	: 4 x 800W
4Ω per channel	: 4 x 1400W
8Ω bridge (x2)	: 2 x 2800W
4Ω bridge (x2)	: N/A
Frequency Response	: 20Hz to 20KHz
Sensitivity	: 0.775V / 1V / 38dB
Mode	: Stereo / Parallel / Bridge
Fan Speed	: Auto - Speed
Input Connector	: 3 pin XLR
Output Connector	: Speakon
Filter Capacity	: 12000 µF / 80V x 8 nos
Input Impedance	: Balanced 20k, Unbalanced 10k
Slew Rate	: 35V / µs
S/N ratio @ rated power @ 8Ω	: ≥ 100dB
Damping Factor (1Khz @ 8Ω)	: ≥ 250
Channel Separation (8Ω load, 1KHz and below)	: ≥ 70dB
Output Topology	: Class H
Dimension (W x D x H)	: 483 x 463 x 89.97mm
Gross Weight	: 26Kg / 57.3Lbs

XN 8K

SKU Number: XN8K-AMP-0000-8765

Description

The Atomik XN 8K is a high-quality quad channel professional amplifier.
Suited for installations and pro audio rental companies.
Very stable, high-fidelity four channels in a compact 2U enclosure.
Employing Class TD topologies for enhanced efficiency and lower heat dissipation.
Designed with a conventional power supply for high reliability and value.

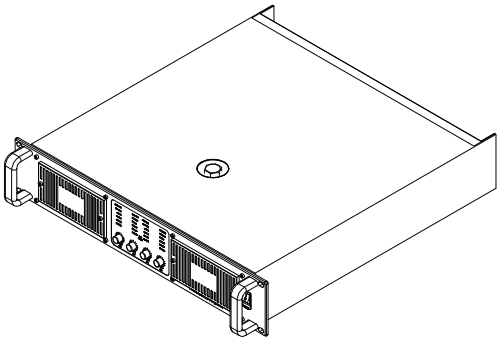

Features

- High wattage in a compact 2U rack unit.
- Quad channel.
- Class H topology.
- DC protection.
- Short circuit protection.
- High temperature protection.
- Output overloaded protection.
- Dented gain controls.
- Ground lift switch.
- Removable dust filters on the front panel.

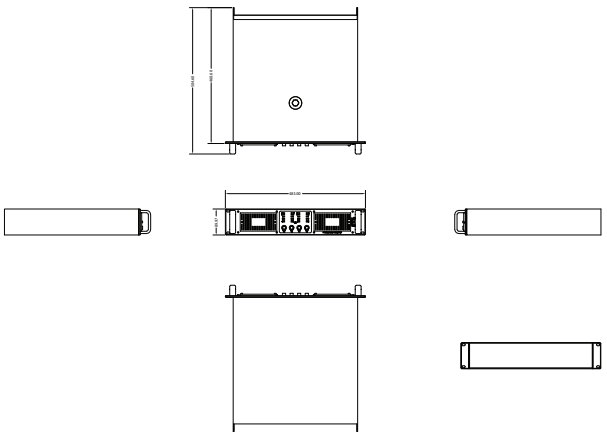

Dimensions in mm

Technical specifications

- 8Ω stereo : 4 x 1300W
- 4Ω stereo : 4 x 2000W
- 2Ω stereo : 4 x 2500W
- 8Ω Bridge : 2 x 4000W
- 4Ω Bridge : 2 x 5000W
- Frequency Response : 20 Hz to 20khz
- Sensitivity : 0.77V / 1V / 38dB
- Mode : Stereo / Parallel / Bridge
- Fan Speed : Auto - Speed
- Input Connector : 3 pin XLR
- Output Connector : Speakon
- Input Impedance : Balanced 20k, Unbalanced 10k
- Slew Rate : 35V / µs
- S/N ratio @ rated power @ 8Ω : ≥ 95dB
- Damping Factor (1Khz @ 8Ω) : ≥ 800
- Channel Separation (8Ω load, 1KHz and below) : ≥ 70dB
- Output Topology : Class TD
- Dimension (W x D x H) : 483 x 451 x 89mm
- Gross Weight : 15 Kg / 33 Lbs

XN D26

SKU Number: XND26-DSP-0000-0206

Description

The XN D26 is a 2-IN/6-OUT digital speaker management system for fitting any crossover configuration, with suitable processing and control for live application use.
2 analog inputs and 6 analog outputs are managed by a powerful DSP Engine, in addition to 24 Bit AD/DA Converters.
Each input channel provides PEQ, Gain Control, Dynamic Low Boost, Noise Gate Function, RMS Compressor, Internal White/Pink Noise Generator and a Configurable Delay.

Each output offers up to 7 PEQ with crossover filters which slopes from 6 up to 48dB/Octave. Each output path also features peak limiter or RMS Compressor selectable, Dynamic Loudness filter (only Output 1,3,5) and driver alignment delay.

The XN D26 supports a full matrix mixing mode where inputs may be routed/mixed in any ratio to any output. For remote configuration and control the XN D26 can be connected via USB or RS485 connections to the dedicated PC control Software.

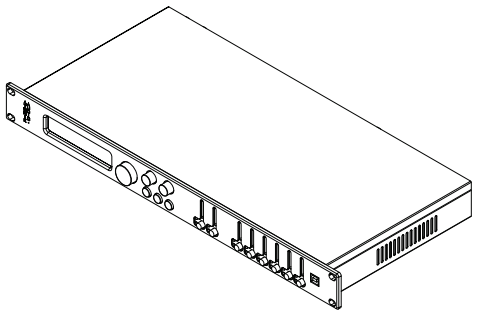

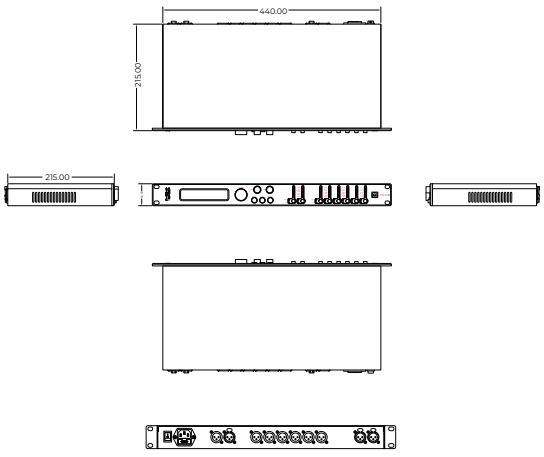

Dimensions in mm

Features

1. Outstanding Performance:

- Excellent sonic performance with 24bit high end converters coupled with 96kHz sample rate 2 inputs, 6 outputs with full matrix mixing.

2. Top-grade DSP Engine:

- 11 band parametric equalization per input channel.
- 7 band parametric equalization per output channel.
- Each band can be switched to Bell, Shelving.
- Crossover filters with slopes from 6dB/Octave up to 48dB/Octave including Butterworth, Bessel, Linkwitz-Riley.
- Each output features a dynamic range controller composed of a Peak Limiter and RMS Compressor.
- Adjustable Delay time up to 900 ms for every input channel upto 340ms for every output channel.

3. Direct PC/Network Connection and Control:

- Rear panel USB connector for direct PC communications.
- RS485 connection for system setup, monitoring and control via fully manageable remote PC software.
- Front panel interactive LCD display for local access and configuration.
- Simultaneous control up to 32 units via PC software.
- Up to 48 storable user presets.
- Security Lockout.

Technical Specifications

1. Audio

- Analog Input : 2 x XLR electronically balanced
- Analog Output : 6 x XLR electronically balanced
- Minimum Load : 150 ohm
- THD+N : 0.001% at 1kHz 0dBu
- S/N : >106dBA
- Frequency Response : 20Hz - 20kHz; -0.5dBu at 20Hz and 20kHz
- AD & DA Converters : 24bit - 96kHz

2. DSP & Processing

- DSP Resolution : 24bit (data) x 24 bit (coeff), 54 bit accumulation registers
  : 96 bit precision on intermediate processing data
- Parametric Equalization : 11 filters per input
  : 7 filters per output
- Filter Type : Bell, Shelving
- Filter Gain : From -12dBu up to +12dBu by 0.5dBu resolution steps
- Center Frequency : From 20Hz up to 20kHz with 1Hz resolution steps
- Filter Q/BW : Q from 0.4 up to 128
- Input gain : From -12dB to +12dB by 0. 1dBu resolution steps
- Output gain : From -18dB to +12dB by 0.1dBu resolution steps
- Crossover Section HPF/LPF : Butterworth 6/12/18/24/36/48 dB per octave
  : Bessel 12/24 dB per octave
  : Linkwitz-Riley 12/24/36/48 dB per octave
- Internal Noise Generator : White/ Pink Noise; Level from -30dBu to 0dBu
- Input Noise Gate : Threshold from -90dBu up to -60dBu
  : Attack time from 1ms up to 1000ms;
  : Release time from 10ms up to 1000ms
- Input RMS Compressor : Threshold from -14dBu up to +16dBu and Bypass
  : Ratio 2:1~100:1; Knee: 0% ~ 100%
  : Attack time from 5ms up to 200ms;
  : Release time from 0.1 sec up to 3 sec
- Output RMS Compressor (if selected) : Threshold from -14dBu up to +16dBu and Bypass
  : Ratio 2:1~100:1; Knee: 0% ~ 100%
  : Attack time from 5ms up to 200ms; Release time from 0.1 sec up to 3 sec
- Output Peak Limiter (if selected) : Threshold from -14dBu up to +16dBu and Byp
  : Attack time from 5ms up to 200ms; Release time from 0.1 sec up to 3 sec
- DLF : Input - Boost Filter from 0% to 100%; Frequency from 20Hz to 20KHz;
  : Output (only for Output 1,3,5) - Attenuation Filter from 0dBu to - 6dBu;
  : Frequency - 20Hz to 1kHz; Q from 1 to 9.9 step 0.1
- Delay : 900 ms 10.4 us increment/decrement steps per input channel
  : 340 ms 10.4 us increment/decrement steps per output channel
- Ground Noise : -90dBu

3. General

- Device Presets : 48 user presets
- Dimensions : 19” x 1.75” x 9” (482x44x230mm) 1RU
- Weight : 3 Kg

XN Patch Box 2

SKU Number: XNPB2-PATB-0000-8564

Description

The Atomik Patch Box 2.0 is an all-in-one unit that distributes power, line level audio signals and speaker level signals. It acts as a hub for all input, output and power supply cabling in the equipment rack or flight case. Its heavy duty construction makes it rugged, roadworthy and completely at home on the road or in an install project. Extremely secure connections in all input, output and power domains.

Great unit for perfect cabling practices in equipment racks and flight cases

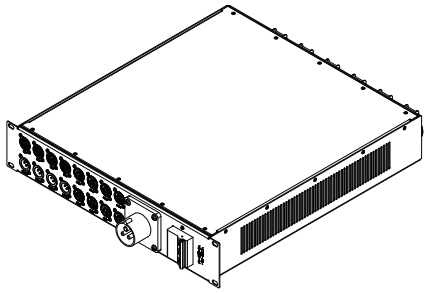

Features

- 4 XLR inputs for line level signals
- 4 XLR link outputs for line level signals
- 8 NL4 Speakon connectors for speaker level outputs
- 1 CEE form 32 ampere power input
- High quality splash proof power connectors
- High current protection
- 3 pole MCB for extra safety in the power section
- 6 x 16 amp Heavy Duty Schuko power connectors on the rear panel
- Heavy duty steel enclosure
- Black powder coating
- Internal flame proof cabling

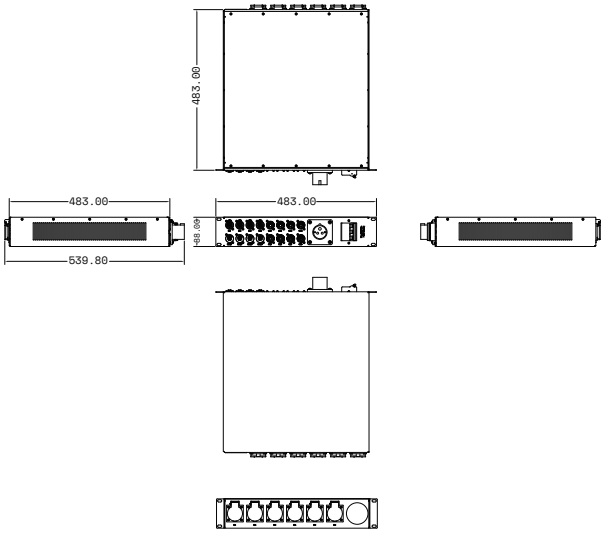

Dimensions in mm

Technical specifications

- Single Phase Operation
- 32 ampere 230 VAC 50Hz Input - 1 connector
- 16 ampere 230 VAC 50Hz Output -6 connectors
- 3 Pole MCB - 1 No.
- Dimensions (in mm & WxHxD) - 483mm x 88mm x 540mm
- Weight - 7.7 kgs / 17 lbs

Accessories

- Cage Nut

Applications

- Rental
- Touring
- HOW
- Nightclubs & Discotheques
- Auditoriums

1 - Output Speaker Level

2 - Input Line Level

3 - Rack Ear Holes

4 - Output Linked Line Level

5 - Input AC Power Supply

6 - MCB

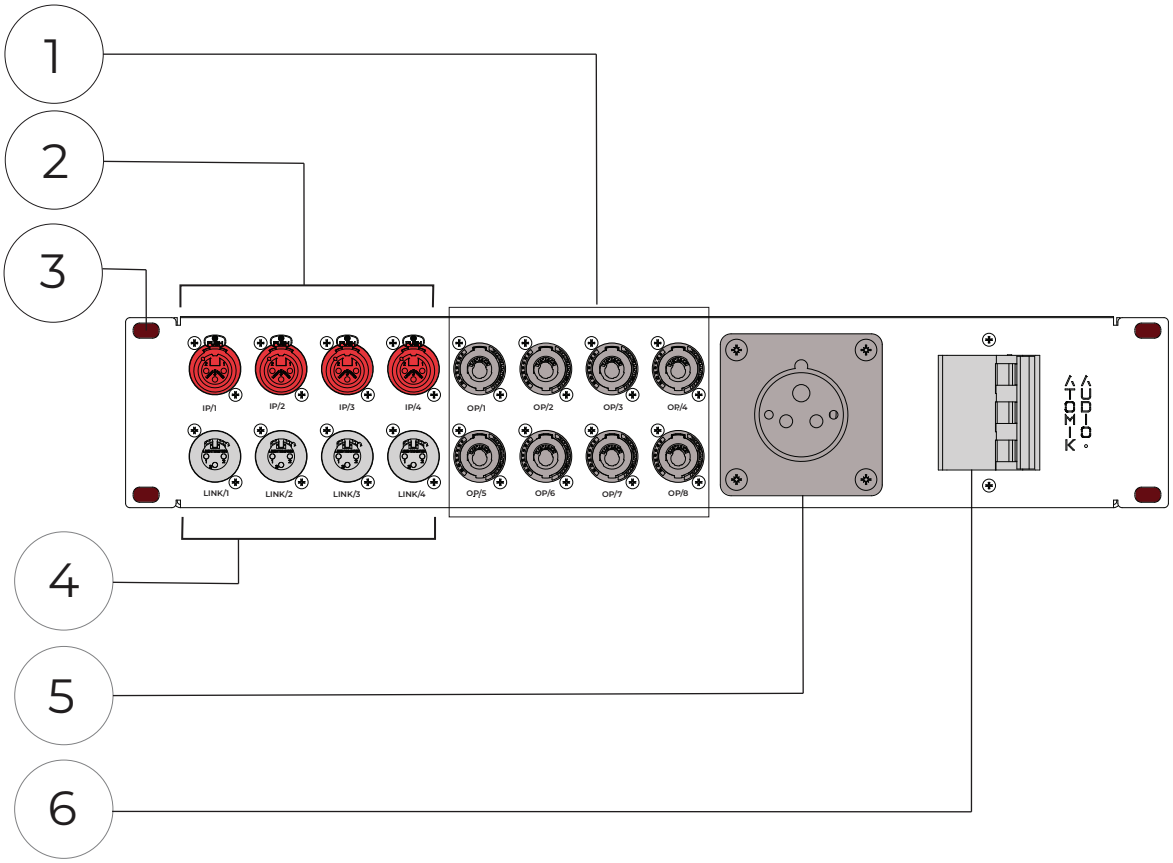

FRONT VIEW

7 - Rack Ear Holes

8 - Input Line Level

9 - Output Speaker Level

10 - Air Vents

11 - MCB

12 - Input AC Power Supply

13 - Output Linked Line Level

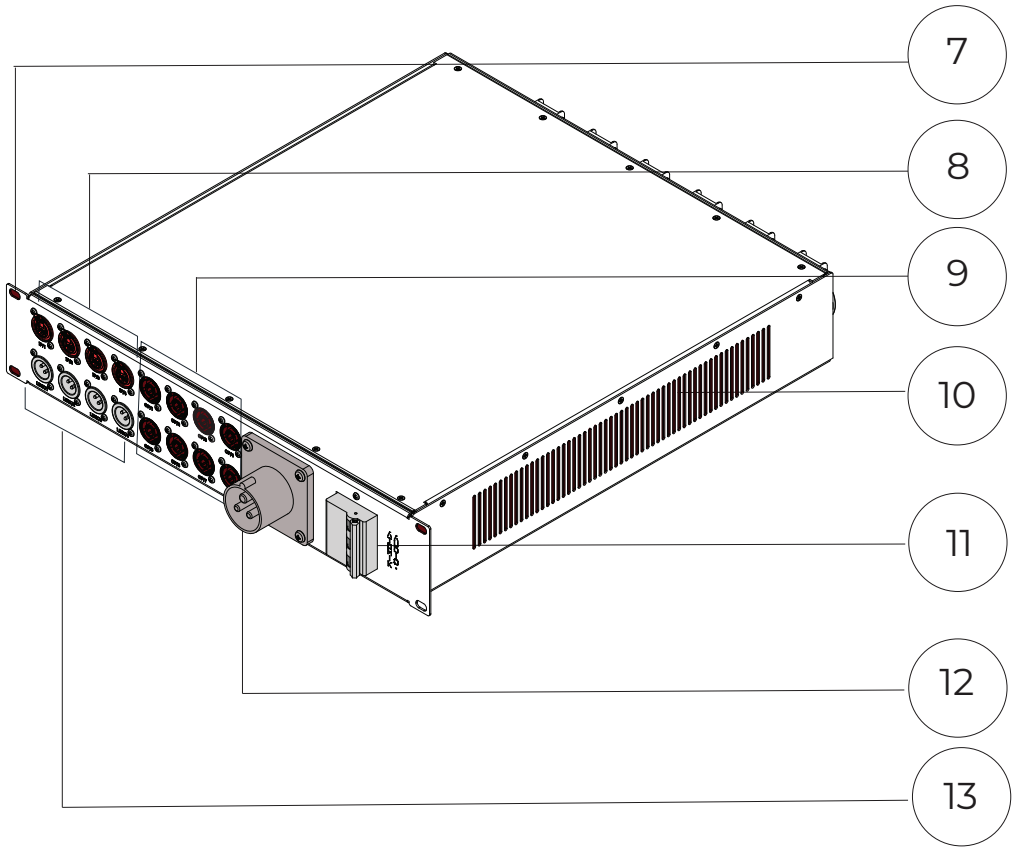

ISO VIEW

14 - Rack Ear holes

15 - Output Connector AC Power

16 - Knockout For Extending Internal Cables

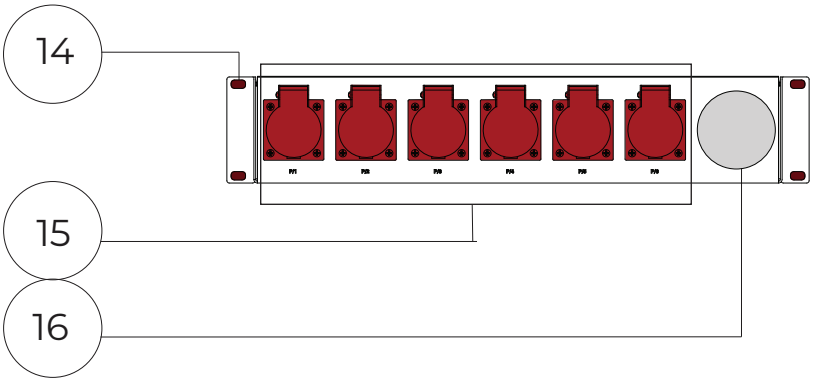

REAR VIEW

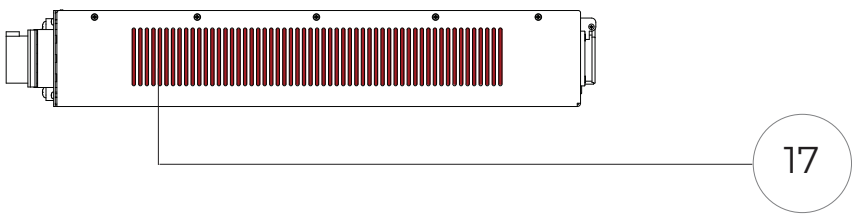

SIDE VIEW

17 - Air Vents

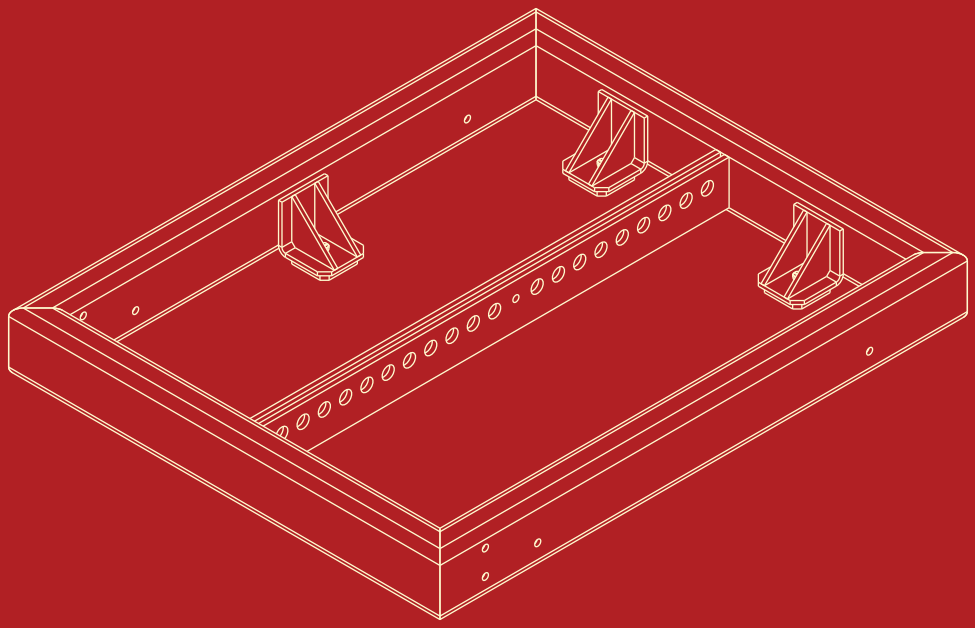

Q212P Stacking Frame

SKU Number: Q212P - STF - BLK - 5938

Description

The Quasar Point Source Stacking Frame is a purpose-built rigging accessory engineered to support both Q212P modules and Q21S subwoofers.

Designed for touring and installation scenarios, it offers maximum flexibility across venue types while maintaining uncompromising stability.

Critically, this frame is configured for single Q212P stacking only. By restricting deployment to one Q212P per frame, Atomik ensures optimal safety, balance, and acoustic precision in compact point-source setups.

This deliberate design choice simplifies logistics, reduces rigging complexity, and guarantees consistent performance across diverse environments.

Whether used in small venues or larger productions, the Quasar stacking frame delivers adaptability with the assurance of safe, single-module operation.

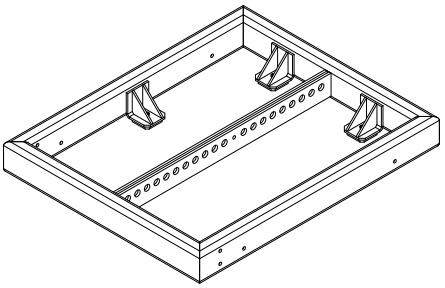

Features

- Constructed from high-grade steel for maximum durability
- Black powder-coated finish for corrosion resistance and a sleek aesthetic
- Heavy-duty welds ensure structural integrity under load
- Includes 12 quick-release pins for fast, secure rigging
- Includes 4 shackles for versatile suspension options
- Load capacity: Rated for 1 ton (1,000 kg) total suspended weight

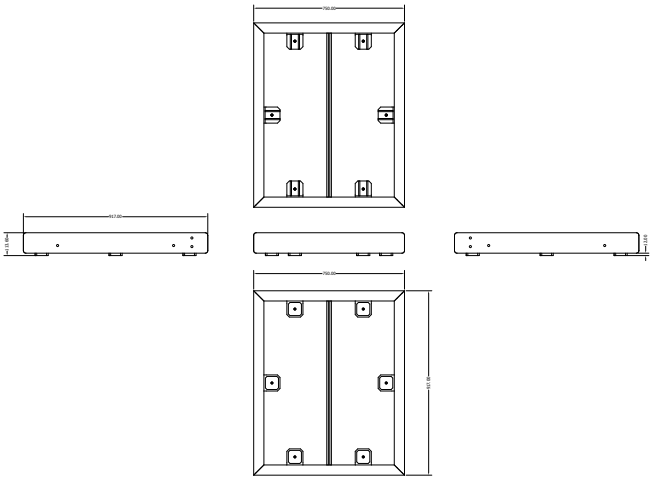

Dimensions in mm

Technical specifications

- Dimension - 754mm x 800mm x 92mm

VISUAL IDENTIFICATION OF PARTS & ACCESSORIES

1 - 8080 Bracket

2 - Central Rigging Bar

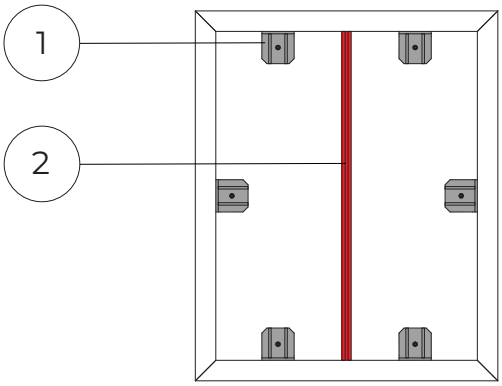

TOP VIEW

3 - 8080 Bracket

4 - Central Rigging Bar

5 - Front Rigging Points Q212P

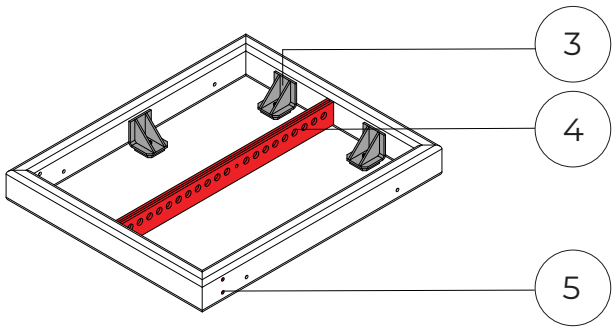

ISO VIEW

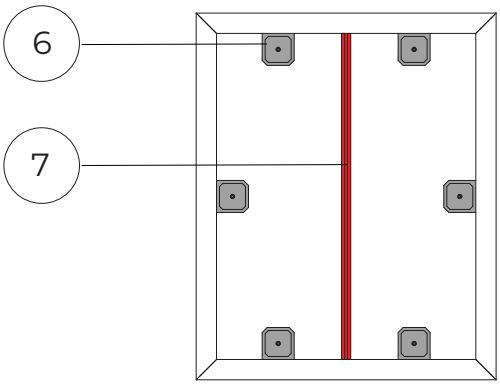

BOTTOM VIEW

6 - 8080 Bracket

7 - Central Rigging Bar



REAR VIEW

8 - Front Rigging Points Q212P

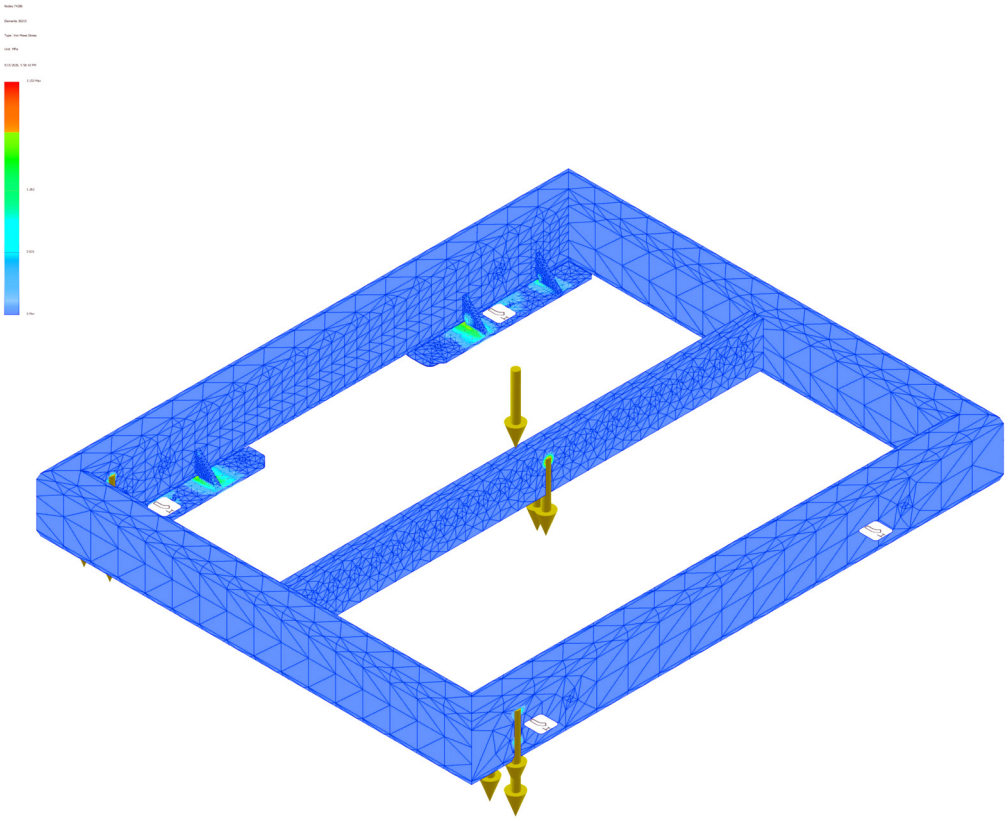

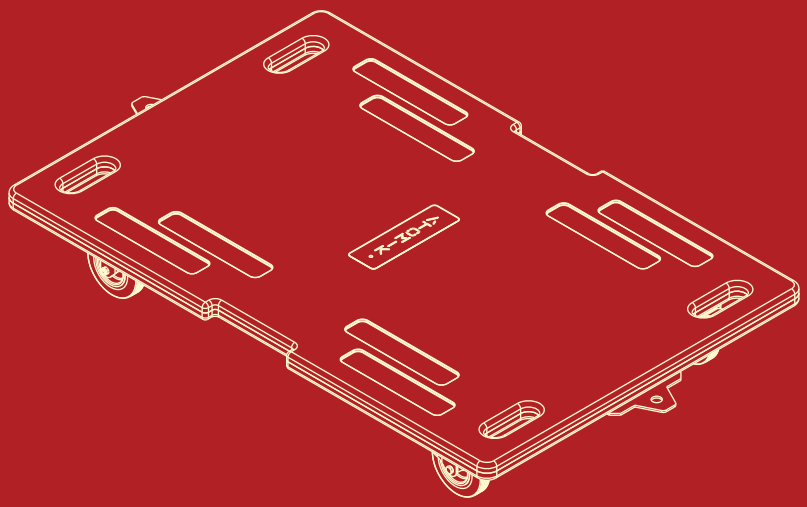

Q21S Wheelboard

SKU Number: Q21S - WBD - 0000 - 4726

Description

The Atomik Quasar Point Source Series Wheel Board is engineered for effortless mobility and maximum durability, serving as the perfect transport solution for Q212P and Q21S enclosures during setup and teardown. Built from heavy-duty 18mm plywood and finished with industrial-grade paint, it withstands the rigors of touring while oversized rugged wheels glide smoothly across uneven terrain.

Ergonomic handles and lockable wheels ensure safe maneuvering, even on inclined surfaces, while its stackable design accommodates multiple subwoofers for efficient transport and storage.

By streamlining workflow with rapid setup and teardown and reducing strain through thoughtful ergonomic handling, the Wheel Board delivers reliability and convenience for both live events and fixed installations—combining durability, safety, and efficiency in one essential accessory.

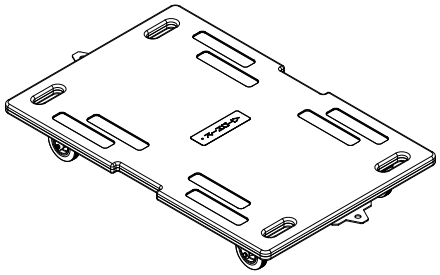

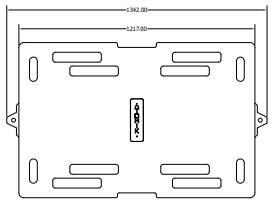

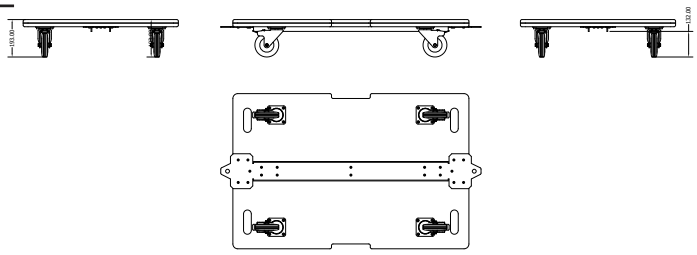

Dimensions in mm

Features

- Rapid Setup & Teardown - Streamline your workflow with quick deployment and packing.
- Safe Maneuvering - Ergonomic handles and lockable wheels ensure secure handling, even on inclined surfaces.
- Stackable Design - Accommodates multiple subwoofers for efficient transport and storage.
- Heavy-Duty Construction
  - -Built from 18mm plywood for long-lasting performance.
  - -Finished with industrial-grade paint to withstand wear and tear.
- Oversized Wheels - Large, rugged wheels glide smoothly over uneven terrain.
- Ergonomic Handling - Thoughtfully placed handles reduce strain and improve control.

Technical specifications

- Dimension - 754mm x 800mm x 92mm

VISUAL IDENTIFICATION OF PARTS & ACCESSORIES

1 - Handle

2 - Tow Point

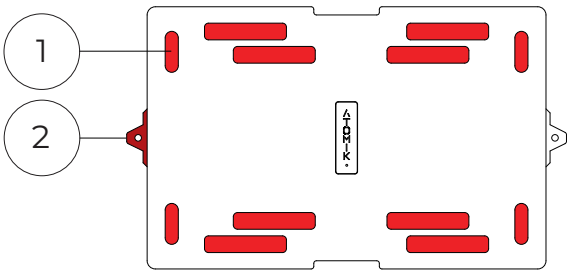

TOP VIEW

3 - Handle

4 - Tow Point

5 - Platform

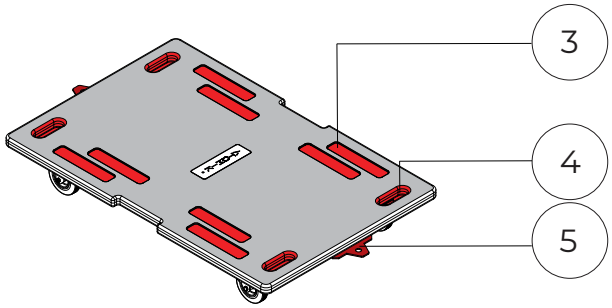

ISO VIEW

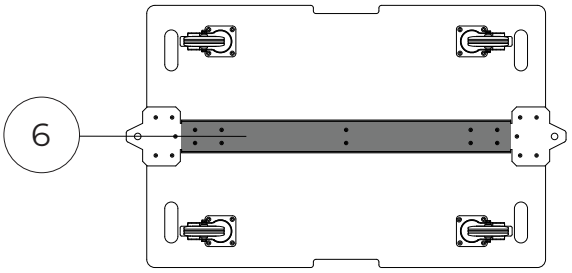

BOTTOM VIEW

6 - Steel C-Chanel For Extra Reinforcement

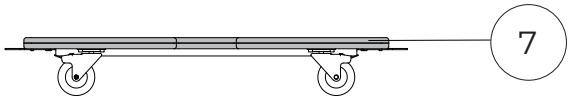

REAR VIEW

7 - Platform

Chapter 2

Accessories

ACCESSORIES - QUASAR POINT SOURCE

Q21S - Base Top

SKU : Q21S - BTOP - BLK - 4386

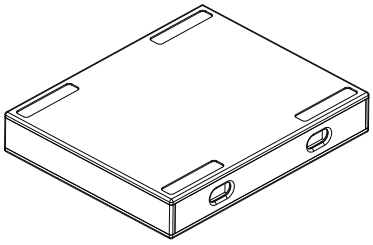

Q21S - Adaptor Board

SKU : Q21S - ADBD - BLK - 7215

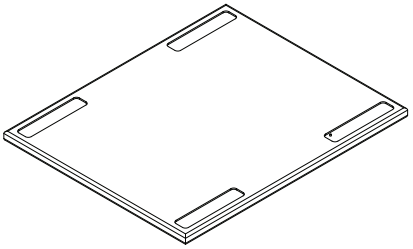

Q21S - Stacking Frame

SKU : Q212P - STF - BLK - 5938

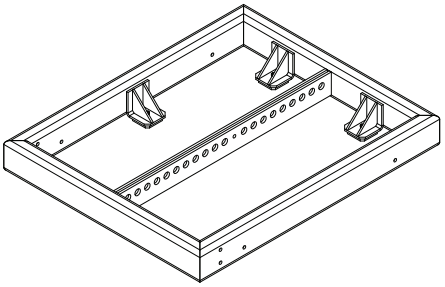

Boomerang Connecting Plate

SKU : QPSS - BCPL - BLK - 8642

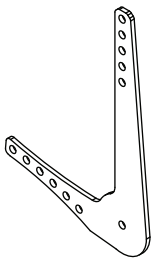

Bumper Link Bar

SKU : QPSS - BLB - BLK - 3175

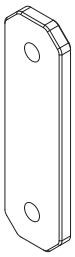

Plank Link Bar

SKU : QPSS - PLB - BLK - 9463

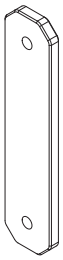

ACCESSORIES - QUASAR POINT SOURCE

Left Connecting Plate

SKU : QPSS - LCPL - BLK - 5821

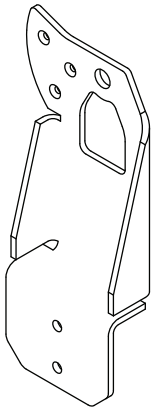

Right Connecting Plate

SKU : QPSS - RCPL - BLK - 7046

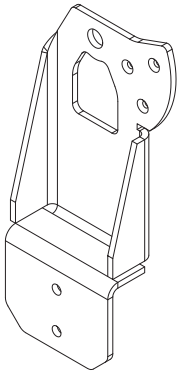

Ball Lock Pin 10mm

SKU : QPSS - BLP10 - BLK - 2694

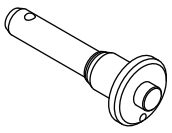

Q21S Roadcase

SKU : Q21S - CASE - 0000 - 8517

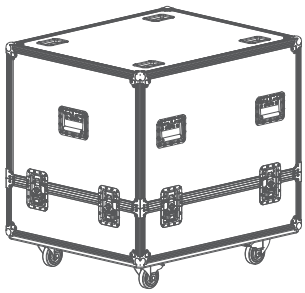

Q212P Roadcase

SKU : Q212P - CASE - 0000 - 6348

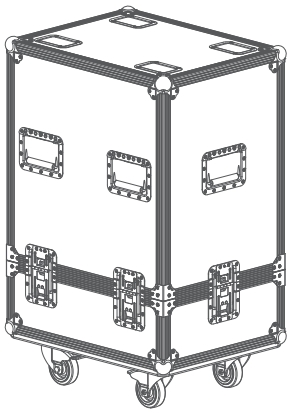

Q21S - Wheelboard

SKU : Q21S - WBD - 0000 - 4726

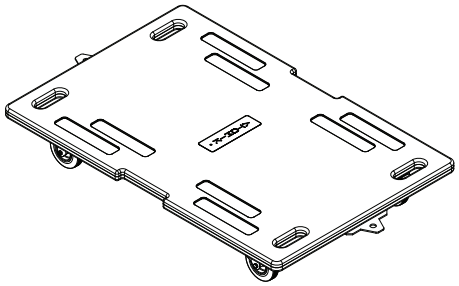

Chapter 3

Sub Array Prediction

Q212P & Q21S - Stacked Configuration 1

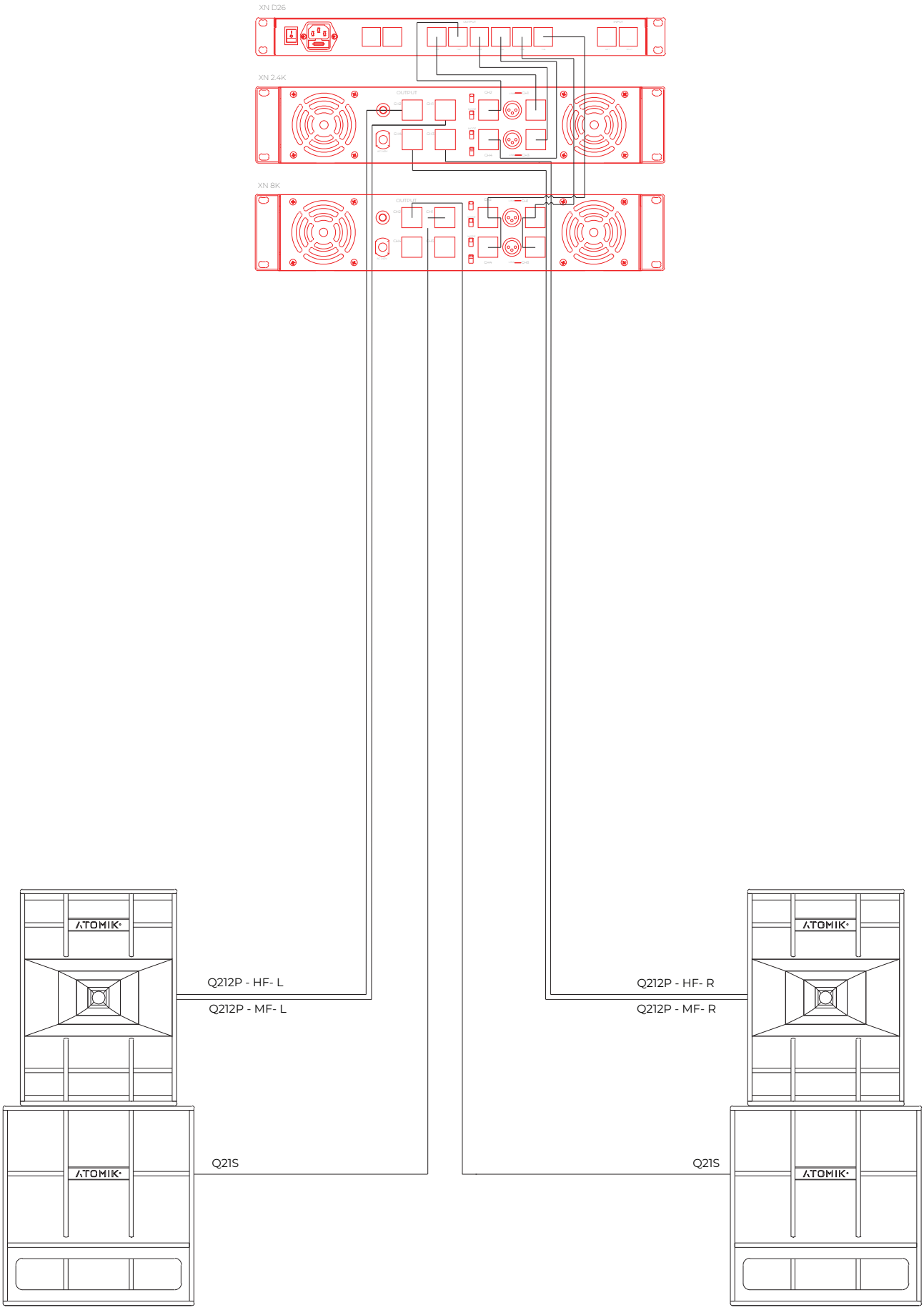

Sub Arrays Prediction

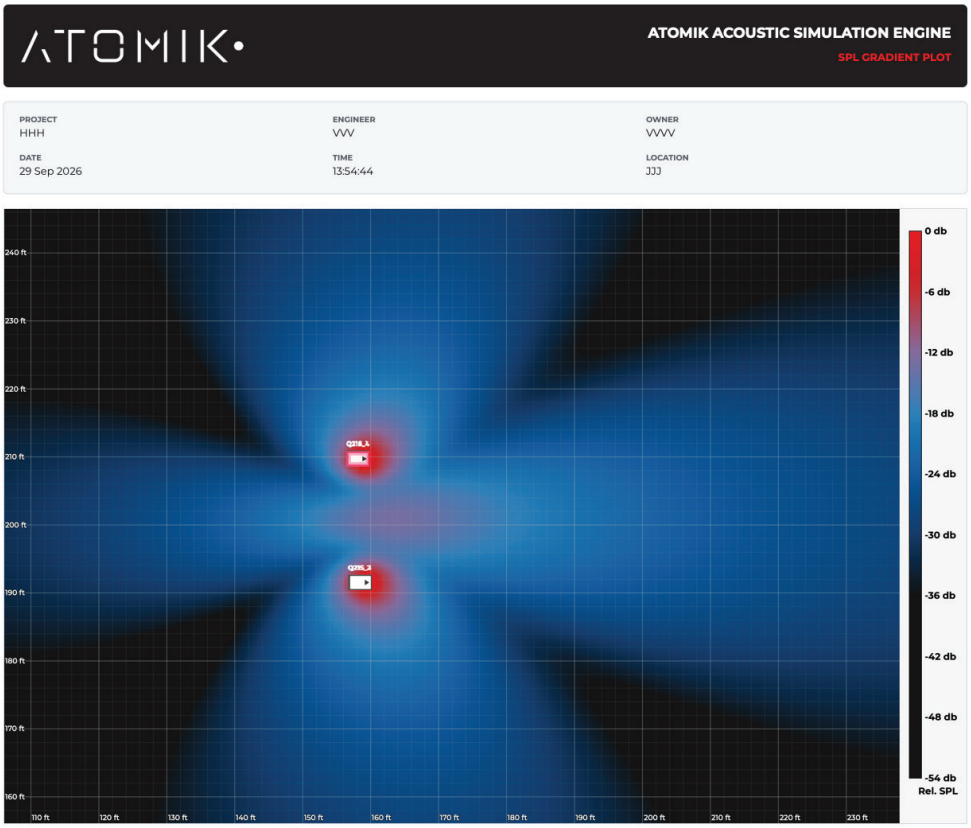

Q212P & Q21S - Stacked Configuration 2

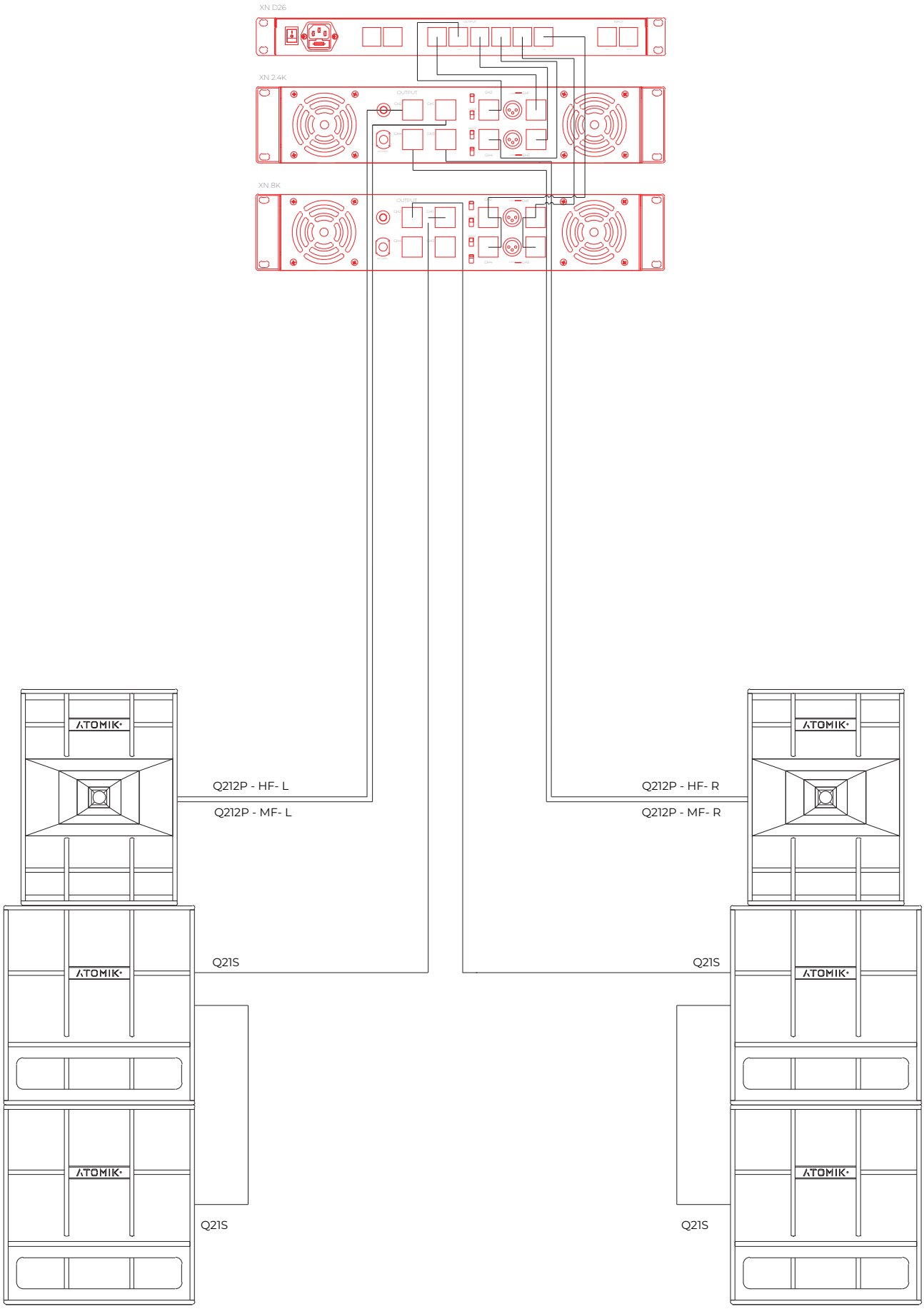

Sub Arrays Prediction

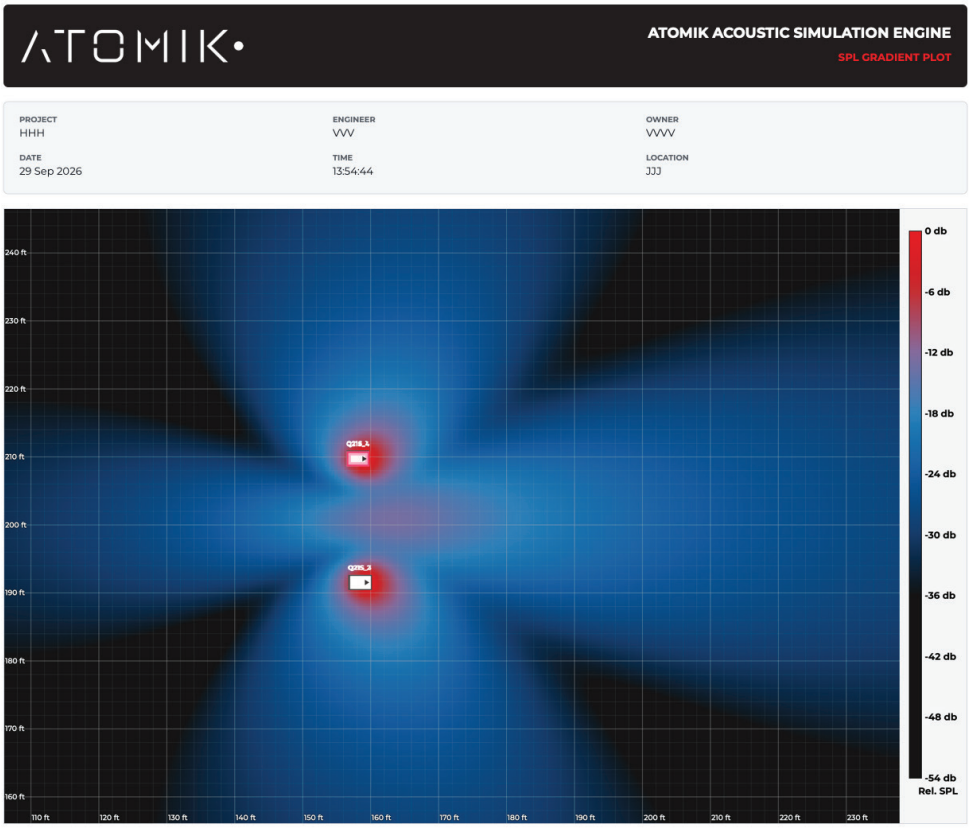

Q212P & Q21S - Stacked Configuration 3

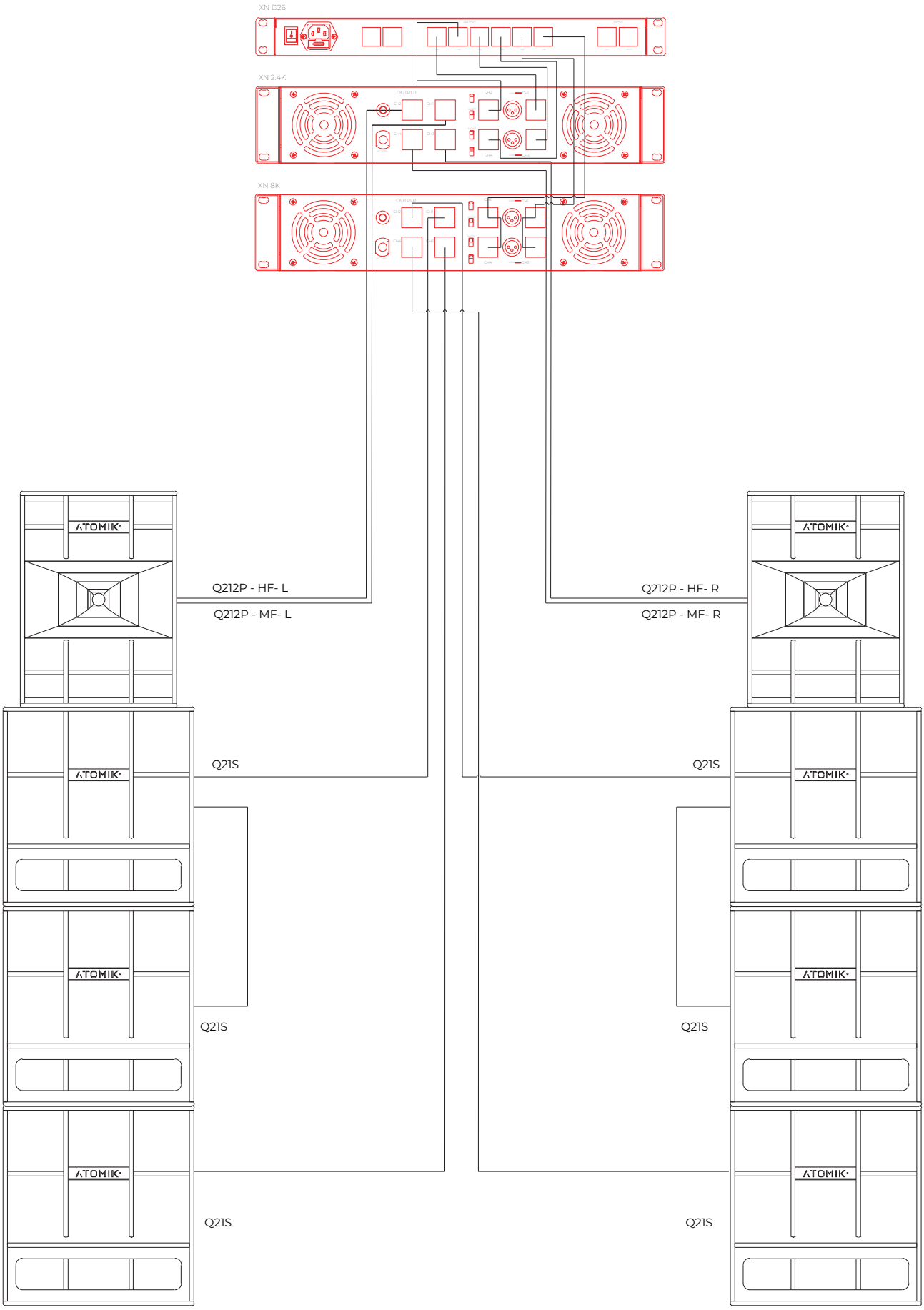

Sub Arrays Prediction

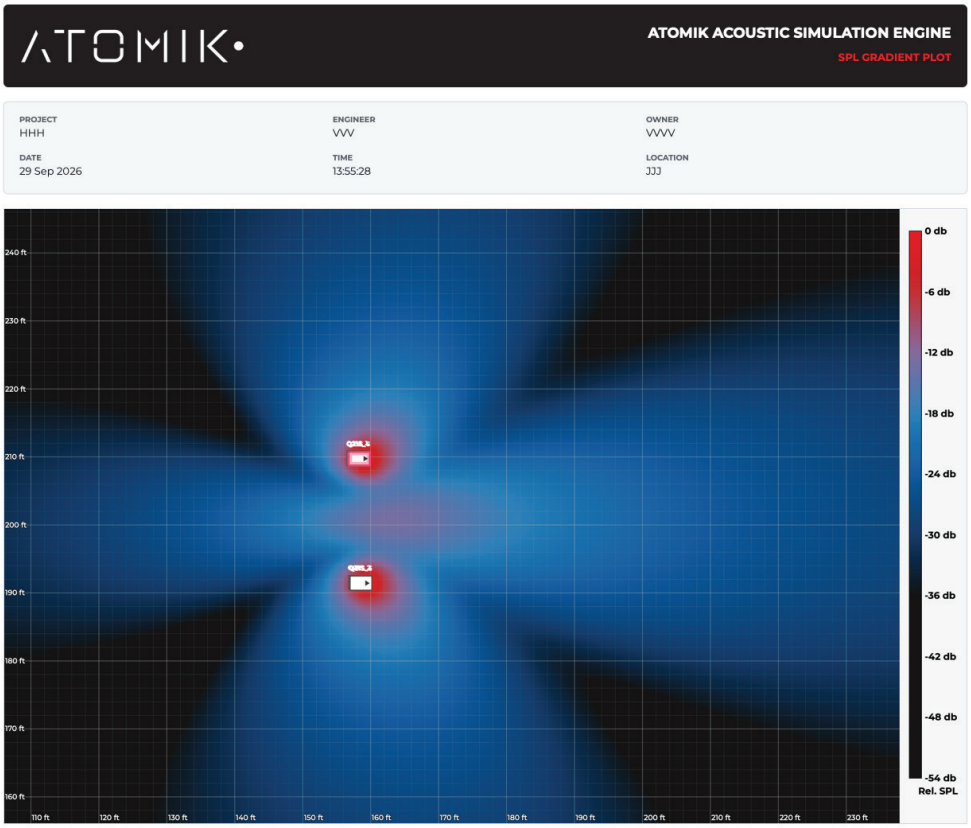

Q212P & Q21S - Stacked Configuration 4

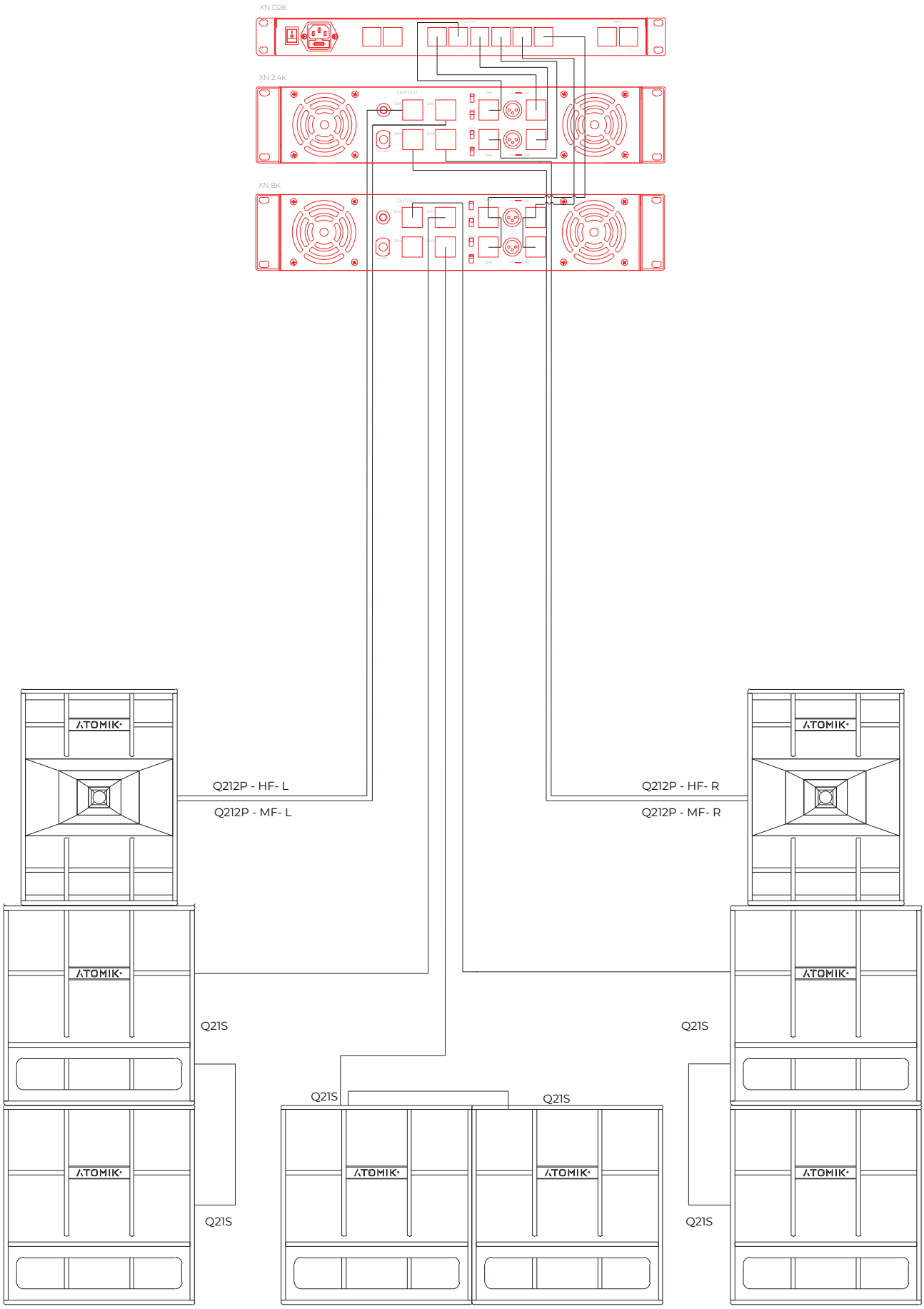

Sub Arrays Prediction

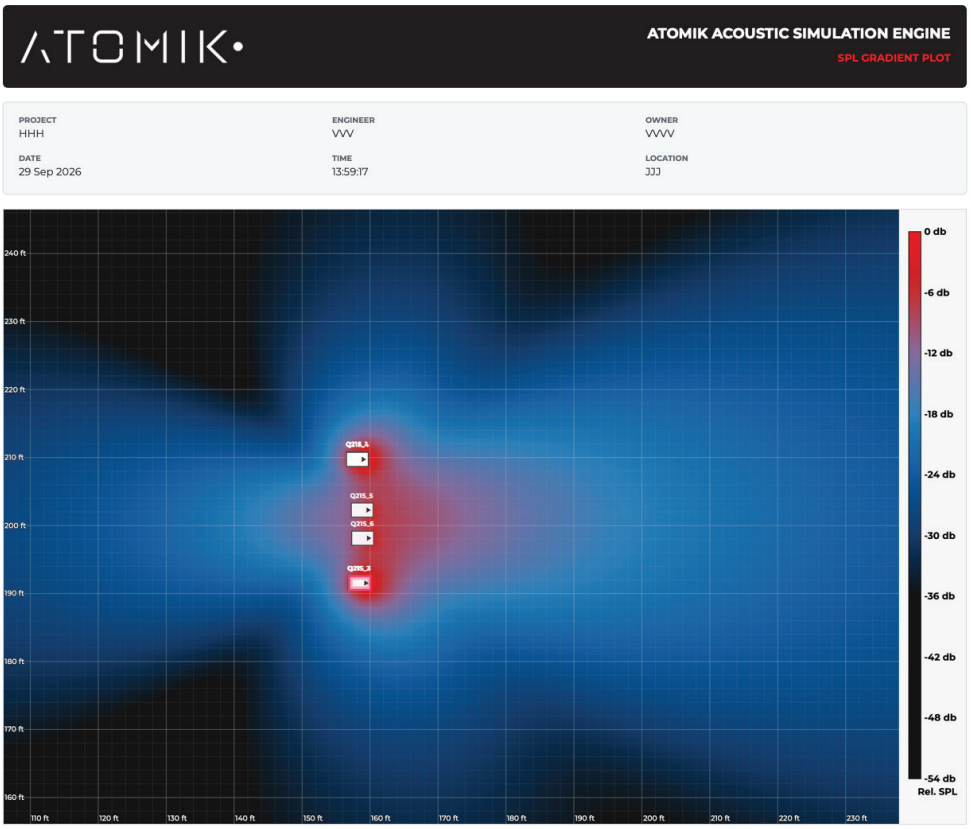

Q212P & Q21S - Stacked Configuration 5

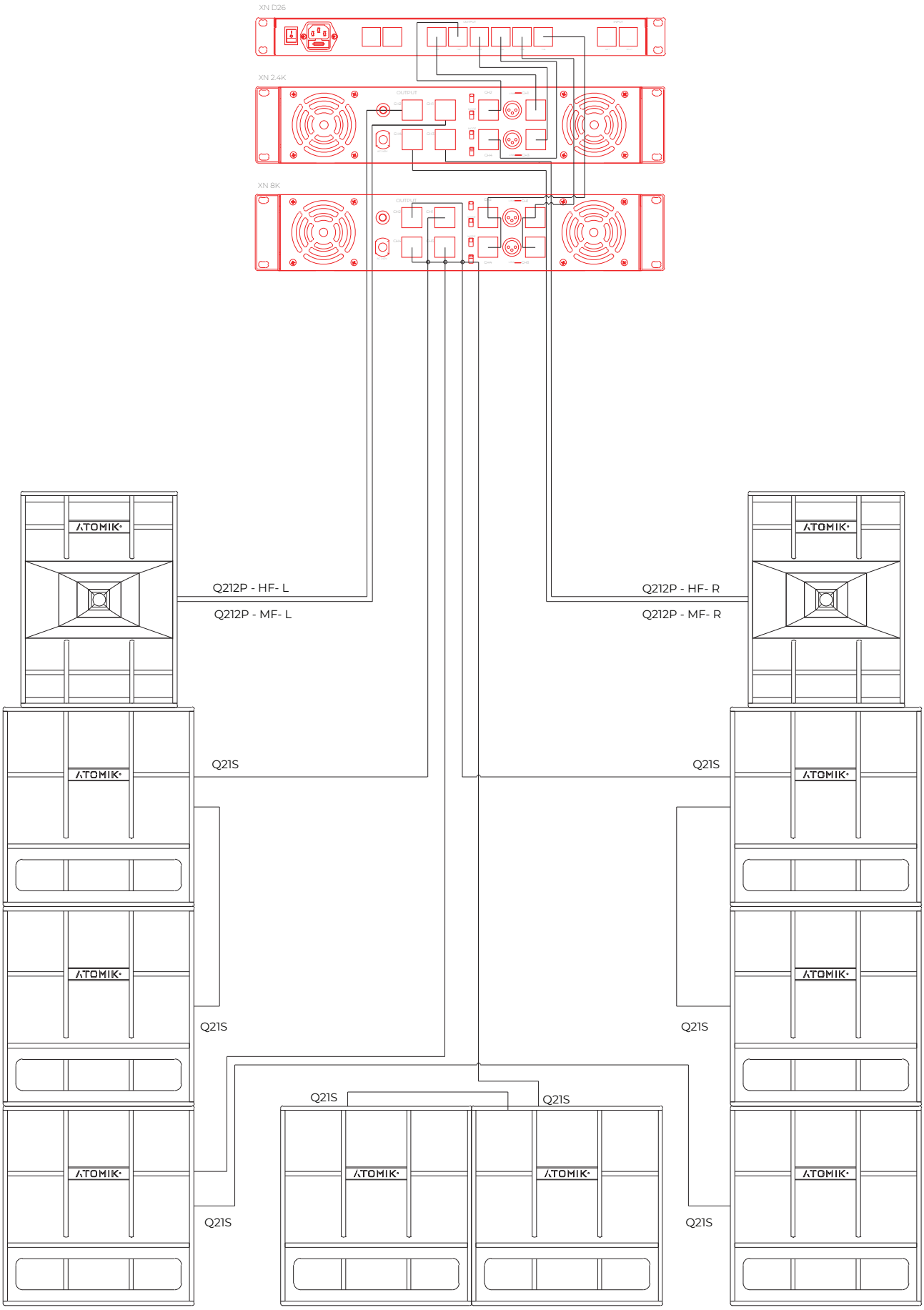

Sub Arrays Prediction

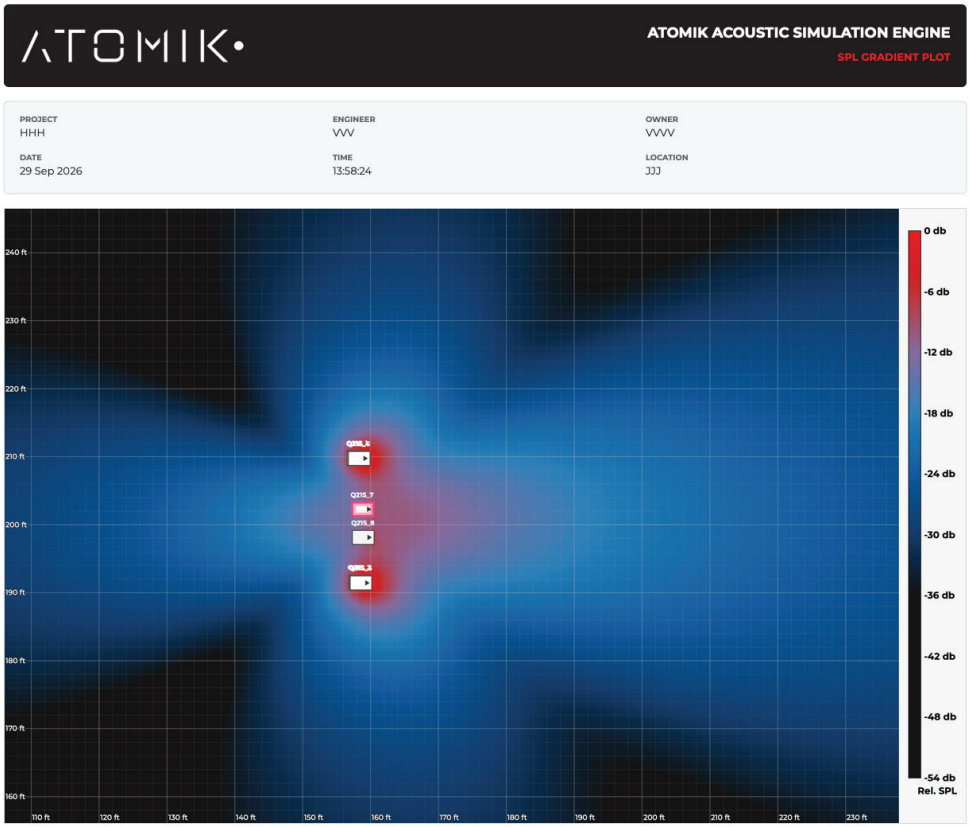

Chapter 4

Assembly

Assembly 1

Assembly 1 - 1 X Q212P & 2 X Q21S

This stack is built from the floor up. Follow steps 1–8 on the next pages.

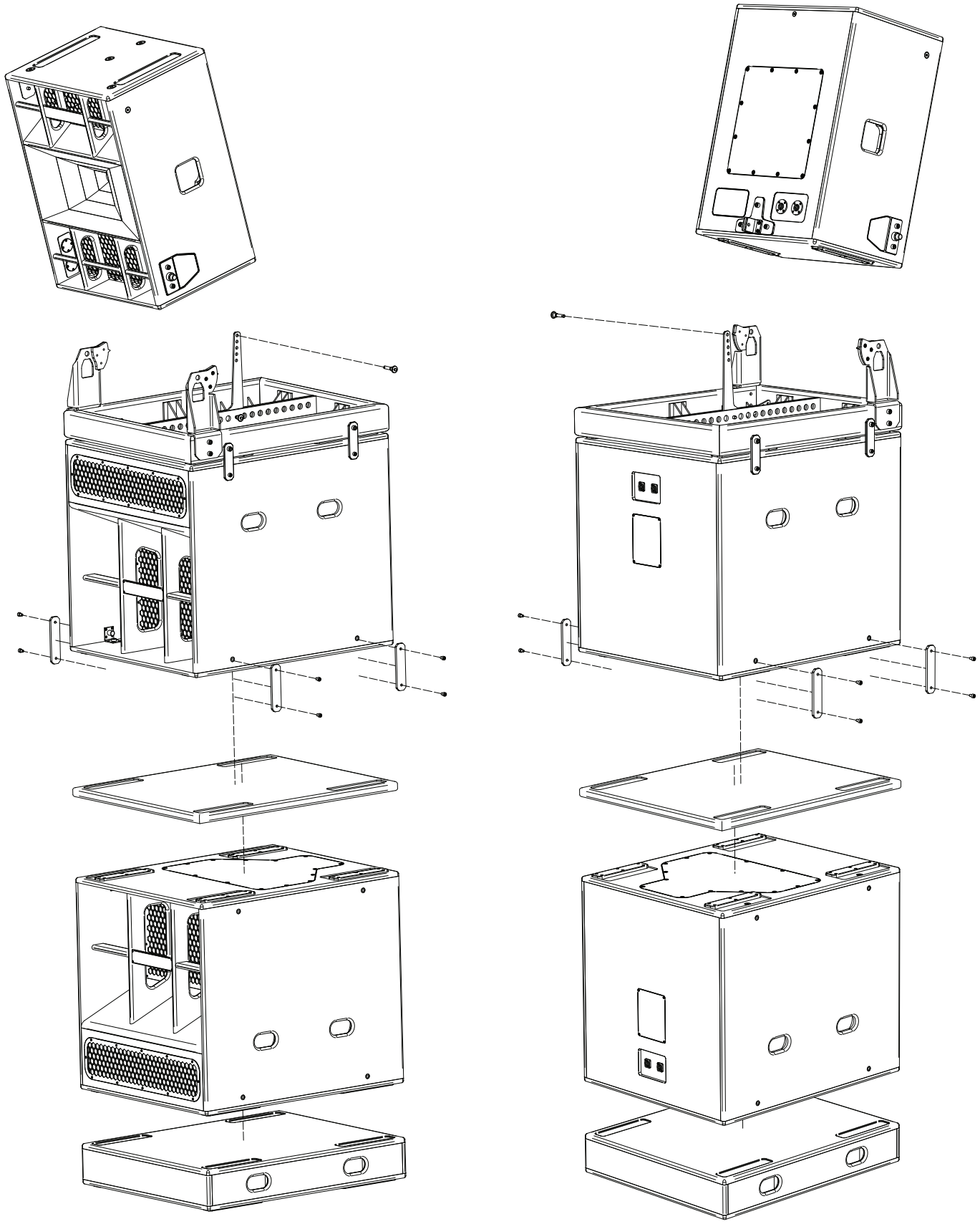

Assembly 1

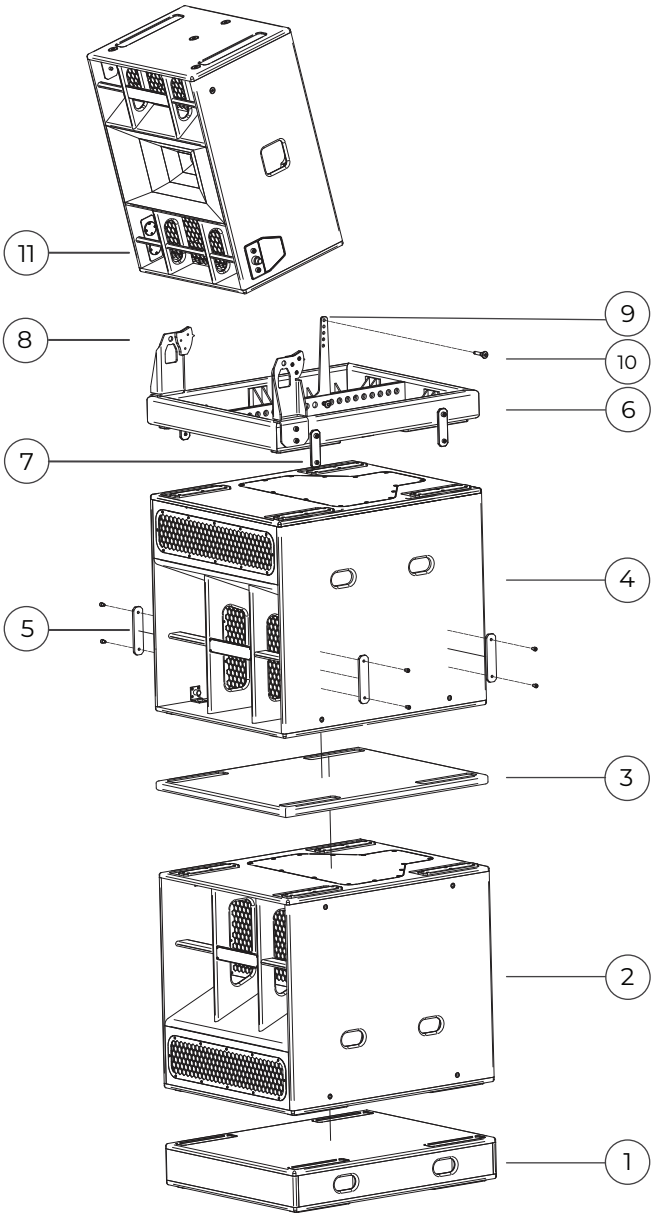

1 - Q21S Base Top

2 - Q21S Subwoofer (Lower)

3 - Q21S Adaptor Board

4 - Q21S Subwoofer (Upper)

5 - Plank Link Bar

6 - Q21S Bumper

7 - Bumper Link Bar

8 - Connecting plate

9 - Boomerang Connecting Plate

10 - Ball Lock Pin 10mm

11 - Q212P Loudspeaker

You will need

- 2 people for each sub (68 kg), 4 people for the Q212P (57 kg), which is lifted to about 1.6 m.
- Tools: (hex key / spanner size)
- A firm, level floor rated for about 193kg plus hardware.

Watch the assembly video
youtube.url

QR Code

Note*

- Read the safety instructions on page 68 - 70 before you start.
- Lift cabinets by their handles only.
- Never stand under a cabinet being lifted.
- Outdoors, lower the stack if the wind exceeds 6 Bft.

Assembly 1

1 - Place the Base Top

Put the *Q21S Base Top* where the stack will stand with the recessed handles facing outward. Check that it is level and doesn't rock.

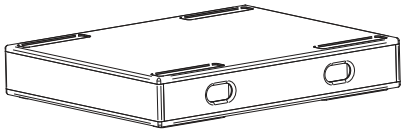

2 - Place the Lower Q21S

With two people, lift the *Q21S* by its handles and lower it onto the Base Top. The skids drop into the recesses. The grille faces the audience.

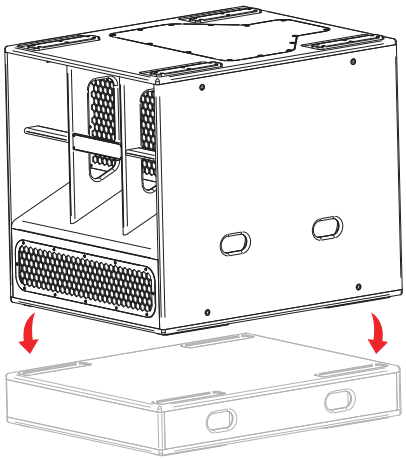

3 - Fit the Adaptor Board

Lay the *Adaptor Board* on the lower Q21S so its recesses line up with the skid dishes on top of the cabinet.

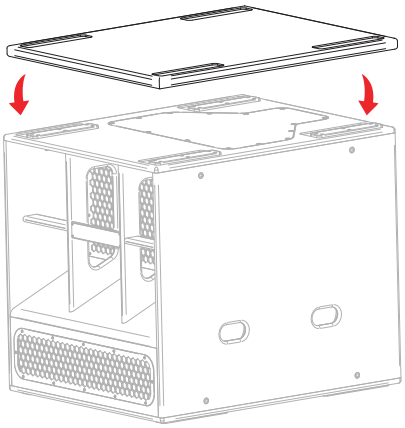

4 - Place the Upper Q21S

Lift the second *Q21S* onto the Adaptor Board, facing the same way as the lower sub. Check that all four skids are seated.

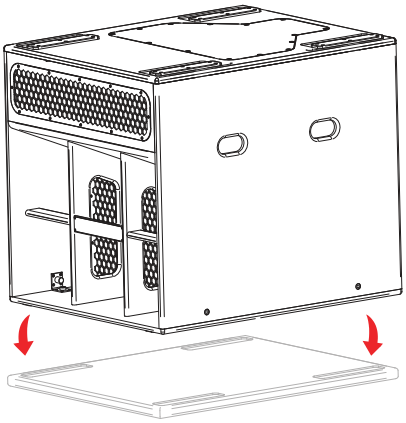

5 - Fit the Plank Link Bars

Bolt the *Plank Link Bars* to the sides of the upper Q21S with the bolts supplied.

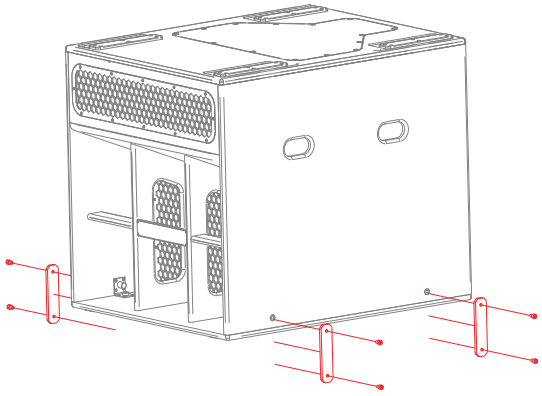

6 - Fit the Bumper

1. Check that the *Connecting Plates* are bolted to the front of the *Bumper*, and the *Boomerang Plate* is pinned at the rear.

2. Place the Bumper on the upper Q21S, plates to the front, and lock it with the *Bumper Link Bars*.

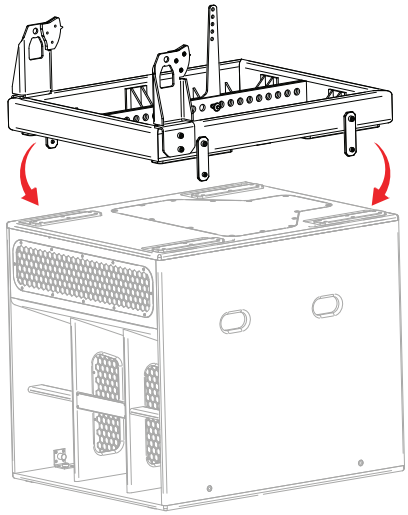

7 - Lift the Q212P onto the Bumper

1. With [3–4] people, lift the Q212P by its handles.

2. Lower its *front-bottom rigging* points into the *Left and Right Connecting Plates*.

3. Push a *Ball Lock Pin* through each side until the button pops out.

4. The Q212P can now pivot forward on these pins. *Keep holding it* until step 8 is complete.

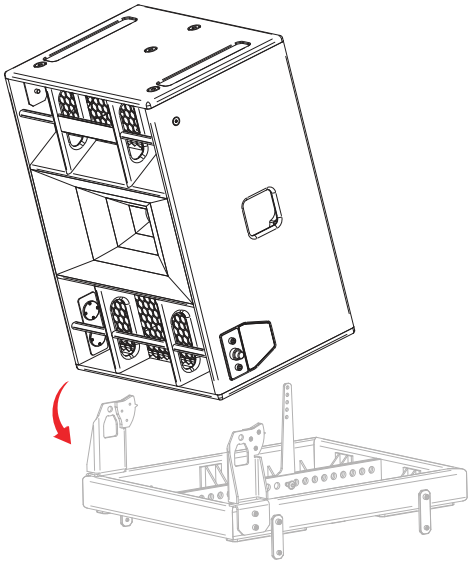

Caution*

- The Q212P is top-heavy until the rear pin is fitted.
- Do not release the loudspeaker until the rear rigging pin is secured.

8 - Fit the Plank Link Bars

1. Tilt the Q212P until its rear rigging point lines up with the hole for your angle in the Boomerang Plate. Use the table below and the angle indicator on the cabinet.

2. Push a Ball Lock Pin through the rear rigging point and the plate.

3. Check the angle matches your plan in Atomik Integral (Aiming tab).

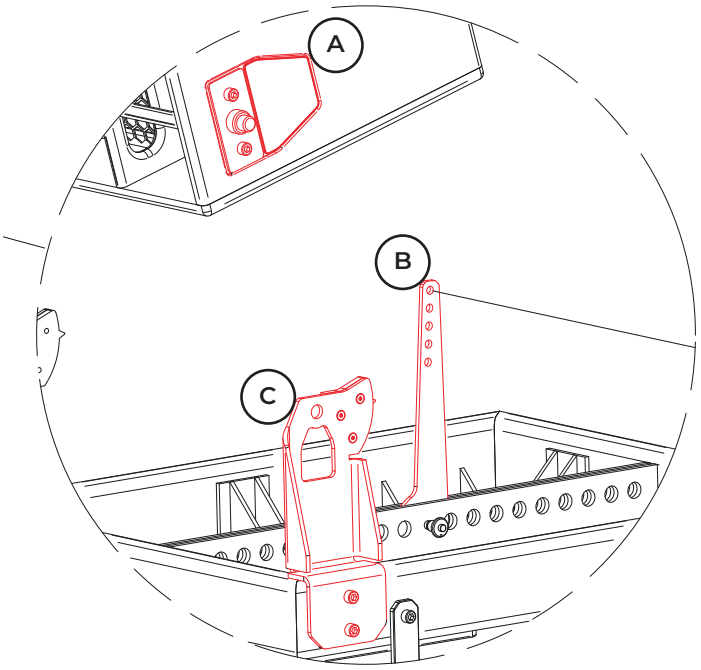

- **A** Q212P rigging point
- **B** Boomerang Plate – tilt holes
- **C** Connecting Plate – front pivot

Taking the stack down

- Work through the steps in reverse.
- Always support the Q212P before you remove the rear pin, then remove the front pins and lift it off with [3–4] people.

Final checks before use

1. Every Ball Lock Pin is fully inserted and its button has popped out. ☑
2. All link bar bolts are tight. ☑
3. The stack is level and does not rock. ☑
4. The Q212P tilt matches the plan in Atomik Integral. ☑
5. Speaker cables are routed so nobody can trip over them or pull on the stack. ☑
6. Outdoors: wind is below 6 Bft. ☑

WARNING*

- Never stack more cabinets than shown in this manual.
- For 1 × Q212P on 3 × Q21S, see Assembly 2.

Assembly 2

Assembly 2 - 1 X Q212P & 3 X Q21S

This stack is built from the floor up. Follow steps 1 – 10 on the next pages.

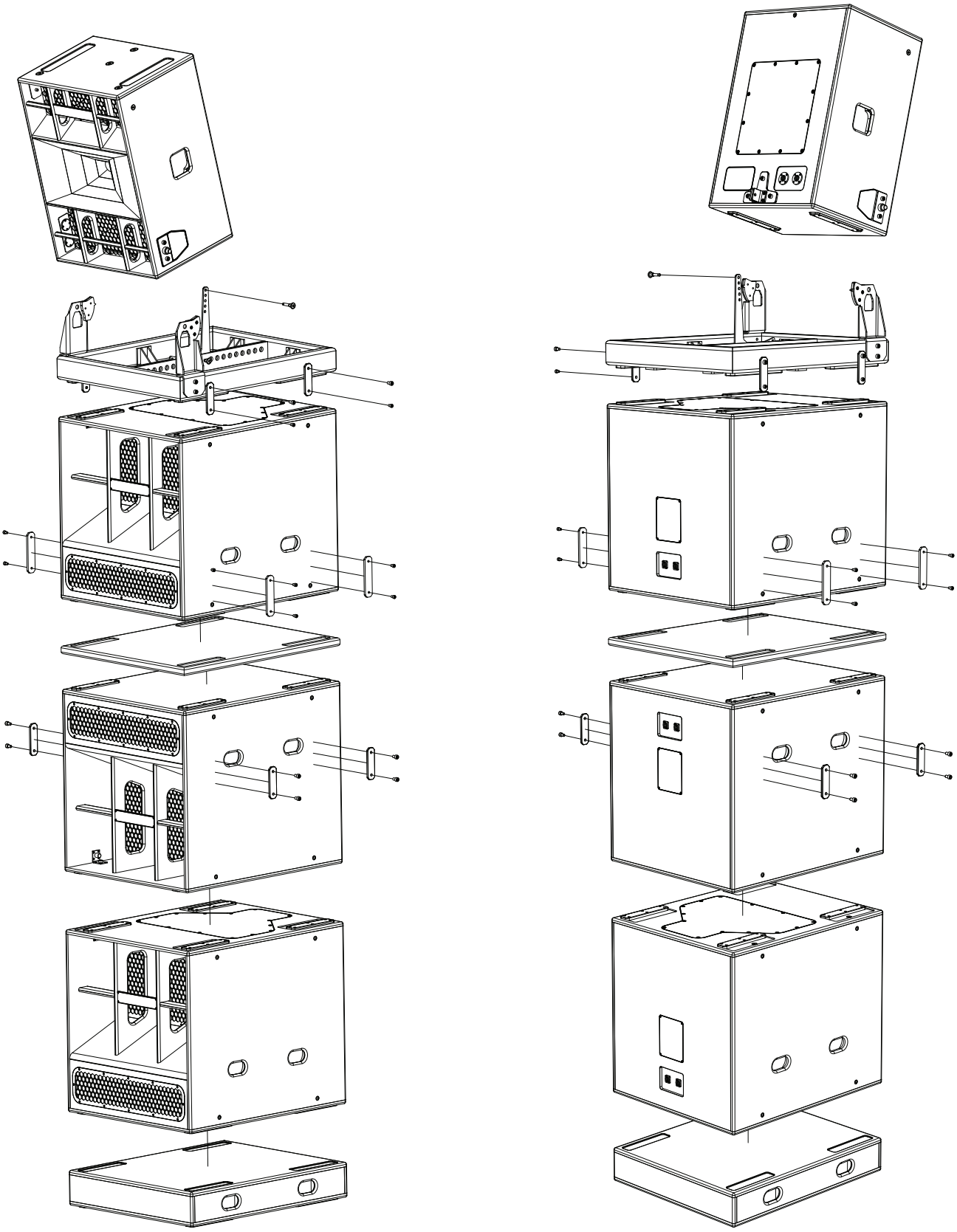

Assembly 2

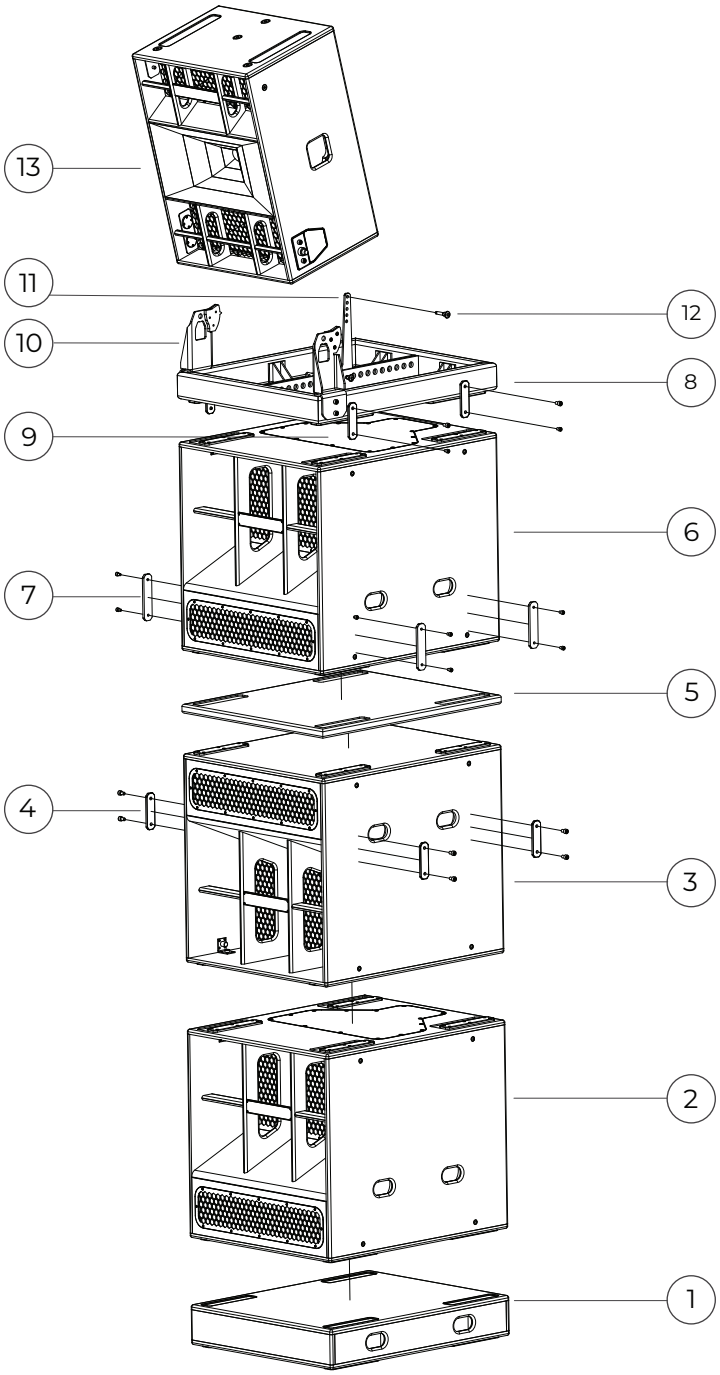

1 - Q21S Base Top

2 - Q21S Subwoofer (Lower)

3 - Q21S Subwoofer (middle)

4 - Plank Link Bar (middle sub)

5 - Q21S Adaptor Board

6 - Q21S Subwoofer (Upper)

7 - Plank Link Bar (upper sub)

8 - Q21S Bumper

9 - Bumper Link Bar

10 - Connecting Plate

11 - Boomerang Connecting Plate

12 - Ball Lock Pin 10mm

13 - Q212P Loudspeaker

You will need

- 2 people for each sub (68 kg).
- The upper sub is lifted to about 1.7 m, so use [3–4] people or a lift.
- The Q212P (57 kg) is lifted to about 2.5 m - use a stable platform or a lift.
- A firm, level floor rated for about 261 kg plus hardware.

Watch the assembly video
youtube.url

QR Code

Note*

- Read the safety instructions on page 73 - 76 before you start.
- Lift cabinets by their handles only.
- Never stand under a cabinet being lifted.
- Outdoors, lower the stack if the wind exceeds 6 Bft.

Assembly 2

1 - Place the Base Top

Put the *Q21S Base Top* where the stack will stand with the recessed handles facing outward. Check that it is level and dosen't rock.

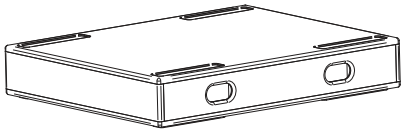

2 - Place the Lower Q21S

With two people, lift the *Q21S* by its handles and lower it onto the Base Top. The skids drop into the recesses. The grille faces the audience.

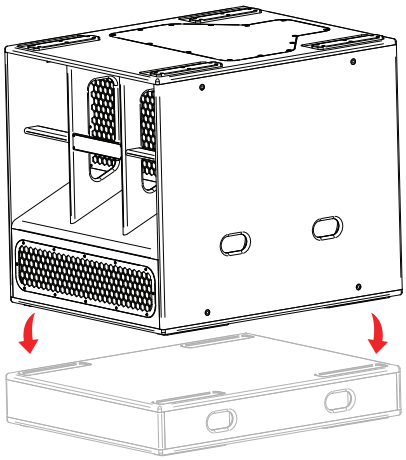

3 - Place the middle Q21S

Lift the second *Q21S* directly onto the lower sub, with no Adaptor Board between them.

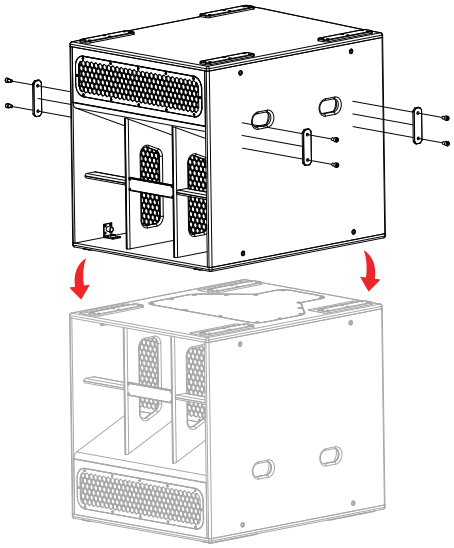

4 - Fit the Plank Link Bars

Bolt the Plank Link Bars to the sides of the middle Q21S subwoofer with the bolts supplied.

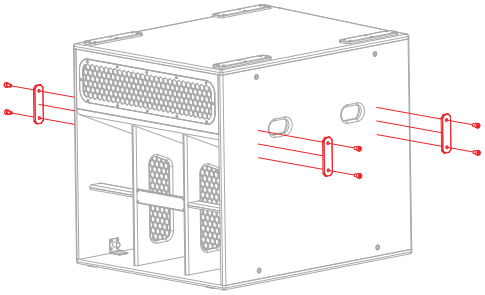

Assembly 2

5 - Fit the Adaptor Board

Lay the *Adaptor Board* on top of the middle Q21S so its recesses line up with the cabinet's skids.

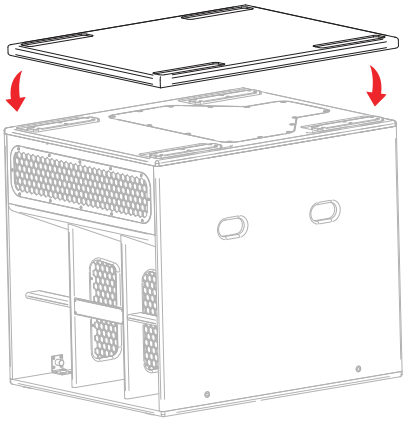

6 - Place the Upper Q21S

With [3–4] people or a lift, place the third *Q21S* on the Adaptor Board, grille facing the audience. Check that all skids are seated.

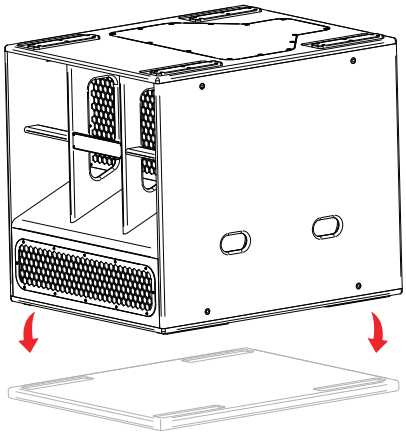

7 - Fit the Plank Link Bars

Bolt the *Plank Link Bars* to the sides of the middle Q21S with the bolts supplied.

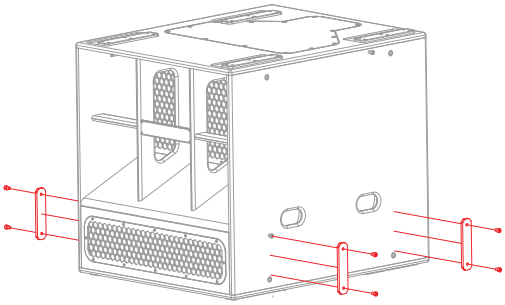

8 - Fit the Bumper

Check that the *Connecting Plates* are bolted to the front of the *Bumper*, and the *Boomerang Plate* is pinned at the rear. Place the Bumper on the upper Q21S, plates to the front. Lock it with the *Bumper Link Bars*

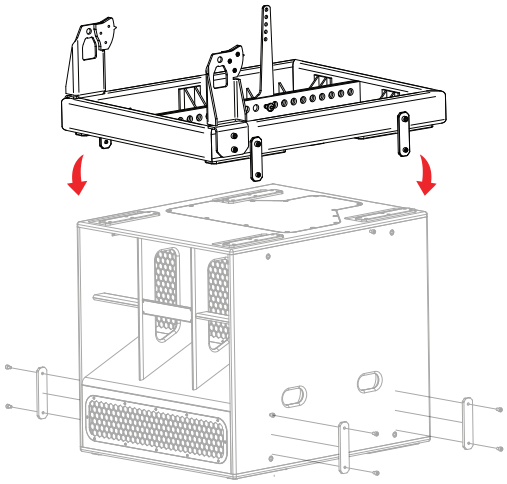

9 - Lift the Q212P onto the Bumper

1. With [3–4] people, lift the Q212P by its handles.

2. Lower its *front-bottom rigging* points into the *Left and Right Connecting Plates*.

3. Push a *Ball Lock Pin* through each side until the button pops out.

4. The Q212P can now pivot forward on these pins. *Keep holding it* until step 10 is complete.

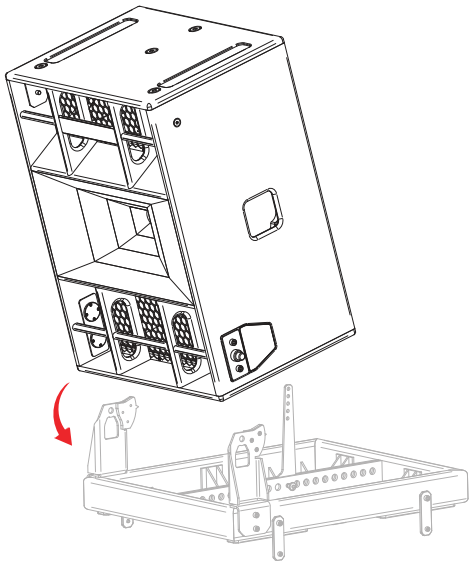

Working at height

- The top of this stack is about 2.5 m high.
- Work from a stable platform or use a lift.
- Never stand on the cabinets.

Caution*

- The Q212P is top-heavy until the rear pin is fitted.
- Don't let go of it.

Assembly 2

10 - Fit the Plank Link Bars

1. Tilt the Q212P until its rear rigging point lines up with the hole for your angle in the Boomerang Plate.

2. Use the table below and the angle indicator on the cabinet.

3. Push a Ball Lock Pin through the rear rigging point and the plate.

4. Check the angle matches your plan in Atomik Integral (Aiming tab).

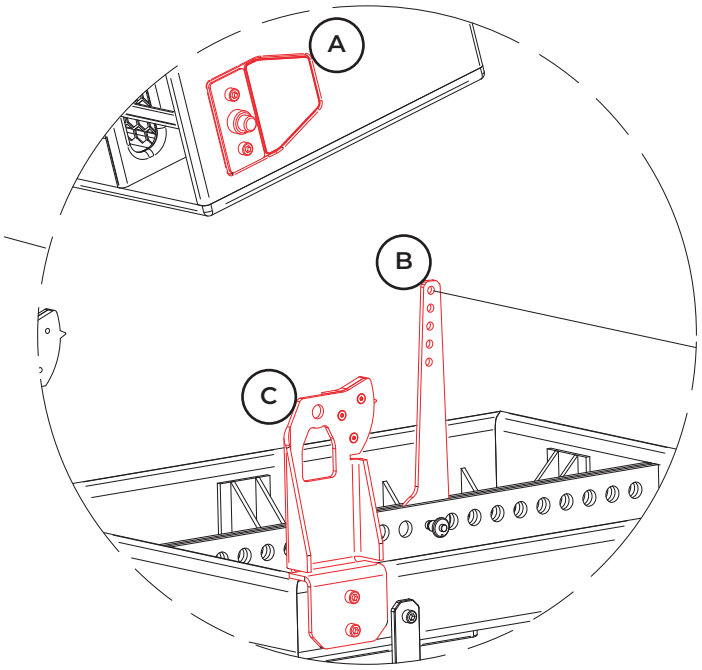

A Q212P rigging point

B Boomerang Plate – tilt holes

C Connecting Plate – front pivot

Taking the stack down

- Work through the steps in reverse, from a platform or lift.
- Always support the Q212P before you remove the rear pin, then remove the front pins and lift it off with [3–4] people.

Final checks before use

1. Every Ball Lock Pin is fully inserted and its button has popped out. ☑
2. All link bar bolts are tight. ☑
3. The stack is level and does not rock. ☑
4. The Q212P tilt matches the plan in Atomik Integral. ☑
5. Speaker cables are routed so nobody can trip over them or pull on the stack. ☑
6. Outdoors: wind is below 6 Bft. ☑

WARNING*

- Never stack more cabinets than shown in this manual.

WARRANTY

Thank you for choosing the Quasar Series by Atomik. We take great pride in the quality and craftsmanship of our products. To ensure your satisfaction, we provide a comprehensive warranty that covers any manufacturing defects in materials or workmanship . Please review the details of our warranty policy to understand how we support you and your product over its lifespan.

1. Warranty Period

Atomik offers a **1-year limited warranty** for all Quasar Series products, starting from the date of original purchase. This warranty applies to all manufacturing defects and guarantees that the product will function as intended during this period, provided that it is used according to the guidelines in this manual.

2. Warranty Validation

To validate your warranty, you must provide proof of purchase. The original receipt or invoice is required and must show the date of purchase and the authorized dealer where the product was purchased. Warranty claims without this documentation may not be accepted.

3. Transferability of Warranty

The Quasar Series warranty is transferable to a subsequent owner during the warranty period. However, the warranty period will not be extended beyond the original 1-year coverage from the date of purchase. If you sell or transfer ownership of the product, the new owner will inherit the remaining warranty period, provided they also provide the original proof of purchase.

4. Coverage Details

During the warranty period, Atomik will, at its sole discretion, repair or replace any product or parts found to be defective in materials or workmanship. Warranty repairs or replacements will be carried out at no cost to the customer, except for the shipping costs associated with returning the product for service. Products must be shipped prepaid in their original packaging to an authorized Atomik service center or distributor.

5. Exclusions and Limitations

This warranty covers only defects in materials and craftsmanship. It **does not cover** the following:

- **Unauthorized Modifications:** Any modification or repair performed by a third party not authorized by Atomik will void this warranty.
- **Improper Use:** Damage or failure resulting from improper use, misuse, or use not in accordance with the guidelines in this manual.
- **Negligence or Accidents:** Any damage caused by neglect, accidents, mishandling, or misuse by the user, including physical damage, dropping, or impact.
- **Environmental Exposure:** Exposure to extreme conditions such as inclement weather, excessive heat, humidity, or moisture can damage the product and is not covered under this warranty.
- **Acts of God:** Natural events such as lightning, floods, earthquakes, or other acts of God.
- **Wear and Tear:** Normal wear and tear of parts, such as knobs, switches, and connectors, that may degrade with time or heavy usage.

6. Warranty Service Process

In the event of a defect or issue covered by this warranty, follow these steps to initiate service:

- **Contact Atomik Support:** Before returning the product, please contact our support team or authorized dealer to troubleshoot and confirm the issue.
- **Shipping and Handling:** Products being returned must be packed securely in their original packaging. Shipping charges to the service center are the responsibility of the customer. Once repaired, Atomik will cover the cost of return shipping.
- **Inspection and Repair:** Upon receipt, the product will be inspected by our technicians. If the defect is confirmed, the product will be repaired or replaced as necessary.

- **Non-Warranty Repairs:** If the issue is determined to be outside of warranty coverage (due to user error or other exclusions), Atomik will provide a cost estimate for repairs. Non-warranty repairs will only be carried out with customer approval.

7. Liability Limitations

Atomik is not liable for any incidental or consequential damages, including but not limited to loss of profit, data, or usage, that may arise from the use or inability to use the Quasar Series products. The warranty covers the repair or replacement of the defective product only, and Atomik's liability is limited to the value of the product at the time of purchase.

8. Statutory Rights

This warranty does not affect your statutory rights. Some jurisdictions do not allow limitations on how long an implied warranty lasts or the exclusion of incidental or consequential damages, so the above limitations or exclusions may not apply to you.

9. Additional Support

We are committed to providing our customers with exceptional service. If you have any questions or concerns regarding your Quasar Series product, please do not hesitate to contact us at support@atomikaudio.com or visit our website for additional resources.

CONTACTS

Write to us:

2nd Floor, No – 177, New Airport Rd, Hennur, Bengaluru,
Karnataka, India, 560077

Send us an e-mail:

support@atomikaudio.com

Visit our website:

https://www.atomikaudio.com

Follow us:

Instagram - https://www.instagram.com/atomikaudio/